Spring latches

with flange for surface mounting

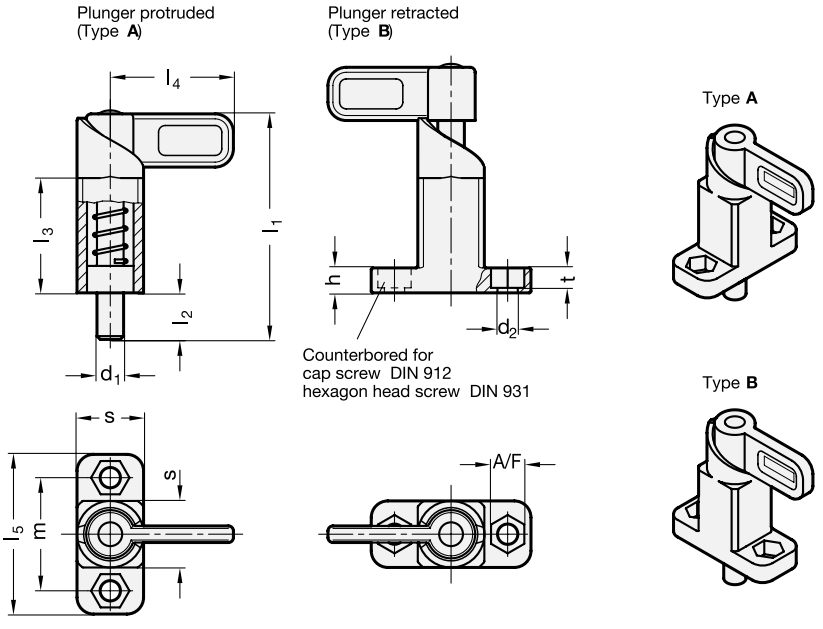

3 Type

A Latch position right-angled to fixing holes

B Latch position parallel to fixing holes

1 d_1 Plunger $^{-0,05}_{-0,25}$ Bore $^{+0,1}_{+0,3}$	2 s	d_2 +0,2	h	l_1 ≈	l_2	l_3	l_4	l_5	m	A/F	t	Spring load in N ≈ initial	end
8	20	6,1	7,5	68	14	35	37	48	34	10	6,1	16	55
10	20	6,1	7,5	68	14	35	37	48	34	10	6,1	16	55
12	20	6,1	7,5	68	14	35	37	48	34	10	6,1	16	55
14	20	6,1	7,5	68	14	35	37	48	34	10	6,1	16	55

Specification

4

- Guide
  Steel precision cast
  - zinc plated, blue passivated **ZB**
  - zinc plated and plastic coated black, textured finish **SW**
- Latch
  Steel precision cast
  zinc plated, blue passivated
- Plunger
  Steel
  zinc plated, blue passivated
- RoHS compliant

Information

Spring latches GN 722.2 are used when the indexing pin is temporarily not allowed to protrude. The indexing pin retracts by turning the latch by 180°. A lock notch will hold the latch in both positions.

Spring latches GN 722.2 are designed for use in **steel construction** or in **locksmith shops** where less precise positioning / locking is normally required. The dimensional tolerances are therefore chosen to ensure that functional safety is guaranteed under dirt exposure and that cost-effetive production methods are used.

see also...
- *Spring latches GN 722.1 (for welding)*
- *Positioning bushings GN 412.2*

How to order

1 2 3 4

GN 722.2-12-20-A-SW

1	d_1
2	s
3	Type
4	Colour