BMS

ELESA original design

Snap door lock

RoHS PA +80° -20°

- **Material**
  Glass-fibre reinforced polyamide based (PA) technopolymer. Resistant to solvents, oils, greases and other chemical agents.
- **Colour**
  Black or grey RAL 7040 (C33), matte finish.
- **Spring**
  Stainless steel.
- **Standard executions**
  - **BMS**: snap lock and unlock.
  It consists of a return spring and a fixing plate.
  It is used for pull opening of doors by means of a handle.
  - **BMS.L**: snap lock and lever for manual release.
  It consists of a return spring for manual operation and a fixing plate.
  It is used for pull opening of doors through the use of the release lever which also represents the handle grip.
  When the lever is locked, the maximum load at breakage of the door lock is = 2500 N.

Features and applications

The snap door lock allows the closure of the swing doors in a quick and easy way.
For the installation of a door lock, use M4 TCEI screws (not included in the supply).

Special execution on request

Door lock in white colour similar to RAL 9002.

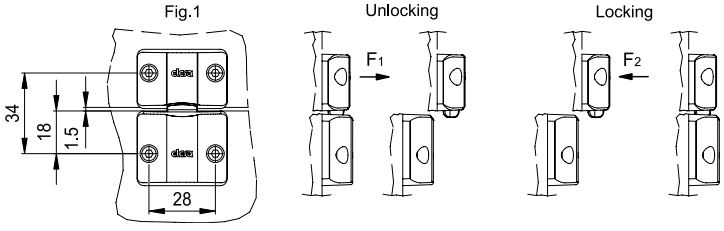

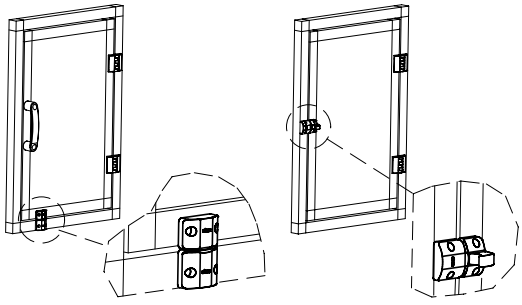

BMS **BMS.L**

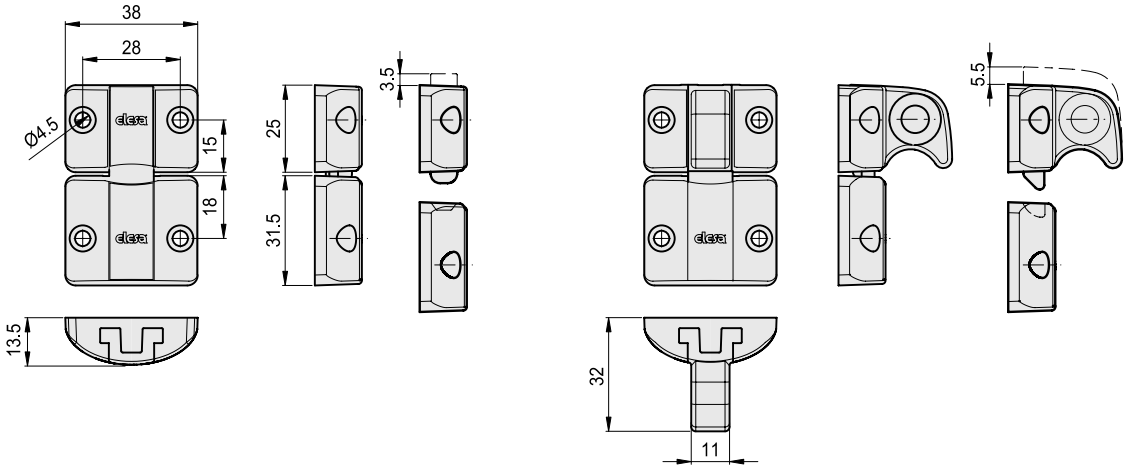

BMS

Code	Description	Opening strength F1 [N]*	Closing strength F2 [N]*	⚖
627001	BMS.32-25-CH4	100	60	23
627001-C33	BMS.32-25-CH4-C33	100	60	23

BMS.L

Code	Description	Closing strength F2 [N]*	⚖
627006	BMS.L-32-25-CH4	25	27
627006-C33	BMS.L-32-25-CH4-C33	25	27

(*) Values referring to the installation with hole centre distance of 34 mm (Fig. 1)

ELESA models all rights reserved in accordance with the law. Always mention the source when reproducing our drawings.