VDS.

Solid handwheels

ELESA Original design

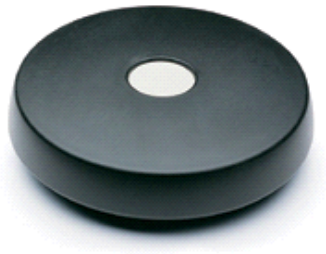

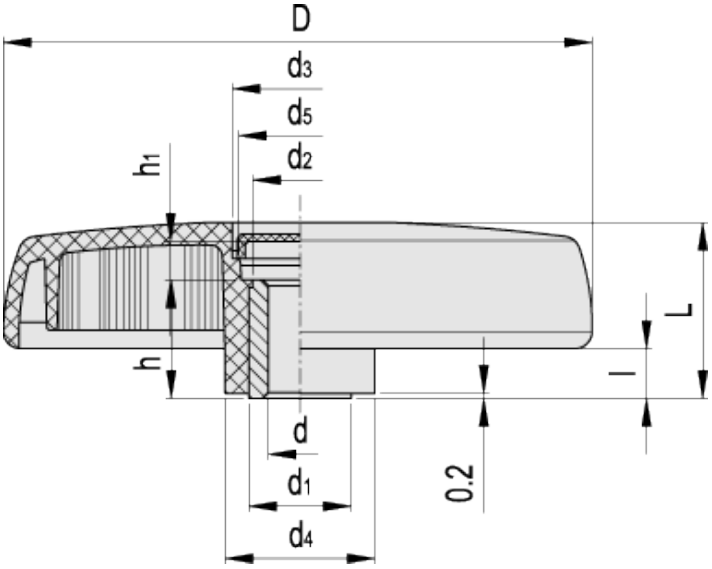

technical informations

Material

High-resilience polypropylene based (PP) technopolymer. Resistant to solvents, oils, greases and other chemical agents.

Colour

Black, matte finish.

Boss cap

Acetal resin based (POM) technopolymer, light-grey colour, push-fit assembly, removable by pressing on the outer edge (ELESA original design).

Standard executions

- VDS: black-oxide steel boss, H7 reamed hole.
- VDS-SST: AISI 304 stainless steel boss, H7 reamed hole.

Accessories on request

Axial retaining washer type GN 184 in black-oxide steel or type GN 184.5 in AISI 303 stainless steel.
The boss cap is also available in technopolymer
in one of the Ergostyle colours (see table), to be ordered separately.

Special executions on request

Bosses with hole and keyway in compliance with DIN 6885/1 P9 tolerance.
To order the handwheel with keyway complete code and description with the index -K (i.e. 72661-R-K VDS.100 A-10-K).

Ergonomy

The rim with internal rear scallops makes the grip and the manoeuvre of the handwheel easier.

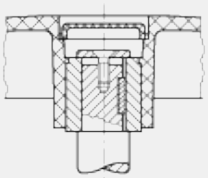

Assembly example
with keyway and axial set screw

Standard Elements		Main dimensions									Bore		C #	L #	Weight
Code	Description	D	L	l	d_1	d_2	d_3	d_4	d_5	h_1	d_{H7}	h	[Nm]	[J]	g
72641-R	VDS.80-A-8	83	29	9	18	16	21	26	19	8	8	17	34	6	84
72642-R	VDS.80-A-10	83	29	9	18	16	21	26	19	8	10	17	34	6	86
72660-R	VDS.100 A-8	102	34	10	22	20	27	30	25	9	8	22	60	13	145
72661-R	VDS.100 A-10	102	34	10	22	20	27	30	25	9	10	22	60	13	140
72662-R	VDS.100 A-12	102	34	10	22	20	27	30	25	9	12	22	60	13	135
72740-R	VDS.150 A-8	150	44	12	26	24	34	38	30	10	8	30	180	26	335
72741-R	VDS.150 A-14	150	44	12	26	24	34	38	30	10	14	30	180	26	315
72840-R	VDS.200 A-8	200	53	14	40	38	44	50	40	13	8	36	320	27	620
72841-R	VDS.200 A-20	200	53	14	40	38	44	50	40	13	20	36	320	27	590

See Technical Data for maximum applicable torque (C) and impact strength (L).

Standard Elements		Main dimensions									Bore		C #	L #	Weight
Code	Description	D	L	l	d_1	d_2	d_3	d_4	d_5	h_1	d_{H7}	h	[Nm]	[J]	g
72665-R	VDS.100-SST-10	102	34	10	22	20	27	30	25	9	10	22	60	13	141
72745-R	VDS.150-SST-14	150	44	12	26	24	34	38	30	10	14	30	180	26	318
72845-R	VDS.200-SST-20	200	53	14	40	38	44	50	40	13	20	36	320	27	596

C1 RAL7021 C2 RAL2004 C3 RAL7035 C4 RAL1021 C5 RAL5024 C6 RAL3000

Code	Description	Boss cap for
29583-*	ECB.D3-*	VDS.150

* Complete with colour index (C1,....,C6).

This product had the following design awards:

ELESA and GANTER models all rights reserved in accordance with the law. Always mention the source when reproducing our drawings.

STANDARD MACHINE ELEMENTS WORLDWIDE