GN 706.2

Semi-split set collars

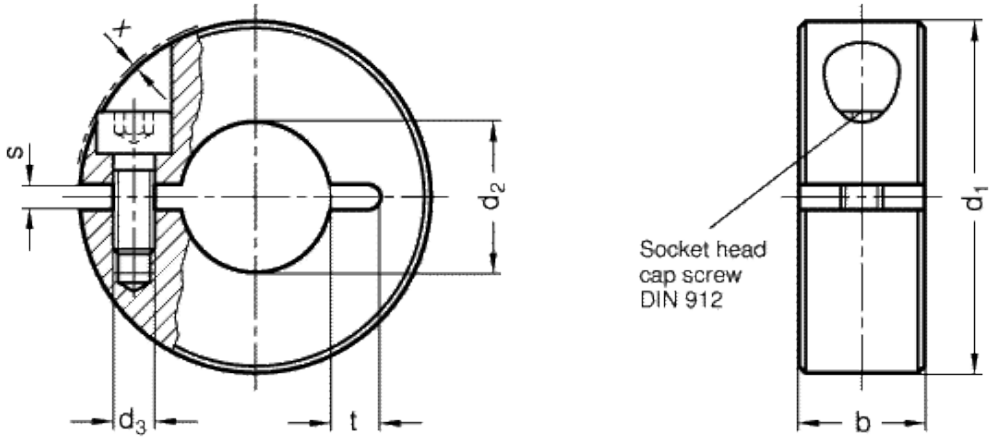

technical informations

Material

- Black-oxide sintered steel ST.
- Aluminium ground AL.

Clamping assembly system

Zinc-plated steel grub screw, cylindrical head with hexagon socket, supplied assembled.
For diameters d_1 = from 20 to 36, d_3 is a through hole; starting form d_1 = 42, d_3 is a threaded blind hole.

Features and applications

Semi-split set collars GN 706.2 can safely and simply be assembled i.e. with high clamping force without damaging the surface of the shaft.
These set collars not only serve as an end stop, but they can also be used for fixing or triggering other components such as end limit switches.

Standard Elements	Main dimensions	Weight

Description	d_1	$d_{2\ H10}$	b ± 0.2	d_3	s	x* ≈	g
GN 706.2-20-B6-ST	20	B6	9	M3	2.1	1.2	20
GN 706.2-22-B8-ST	22	B8	9	M3	2.1	1	20
GN 706.2-26-B10-ST	26	B10	11	M4	2.1	1.6	32
GN 706.2-30-B12-ST	30	B12	11	M4	2.1	0.7	42
GN 706.2-32-B14-ST	32	B14	11	M4	2.1	0.7	40
GN 706.2-36-B15-ST	36	B15	13	M5	2.1	1.4	80
GN 706.2-36-B16-ST	36	B16	13	M5	2.1	1.4	68
GN 706.2-42-B18-ST	42	B18	15	M5	3	0.6	109
GN 706.2-42-B20-ST	42	B20	15	M5	3	0.6	103
GN 706.2-48-B22-ST	48	B22	15	M5	3	0	139
GN 706.2-48-B25-ST	48	B25	15	M5	3	0	127
GN 706.2-55-B28-ST	55	B28	15	M6	3	0.5	171
GN 706.2-55-B30-ST	55	B30	15	M6	3	0.5	163
GN 706.2-60-B32-ST	60	B32	15	M6	4	0.4	196
GN 706.2-60-B35-ST	60	B35	15	M6	4	0.4	182
GN 706.2-65-B40-ST	65	B40	15	M6	4	0.5	104
GN 706.2-20-B6-AL	20	B6	9	M3	2.1	1.2	20
GN 706.2-22-B8-AL	22	B8	9	M3	2.1	1	20
GN 706.2-26-B10-AL	26	B10	11	M4	2.1	1.6	32
GN 706.2-30-B12-AL	30	B12	11	M4	2.1	0.7	42
GN 706.2-32-B14-AL	32	B14	11	M4	2.1	0.7	40
GN 706.2-36-B15-AL	36	B15	13	M5	2.1	1.4	80
GN 706.2-36-B16-AL	36	B16	13	M5	2.1	1.4	68
GN 706.2-42-B18-AL	42	B18	15	M5	3	0.6	109
GN 706.2-42-B20-AL	42	B20	15	M5	3	0.6	103
GN 706.2-48-B22-AL	48	B22	15	M5	3	0	139
GN 706.2-48-B25-ST	48	B25	15	M5	3	0	127
GN 706.2-55-B28-AL	55	B28	15	M6	3	0.5	171
GN 706.2-55-B30-AL	55	B30	15	M6	3	0.5	163
GN 706.2-60-B32-AL	60	B32	15	M6	4	0.4	196
GN 706.2-60-B35-AL	60	B35	15	M6	4	0.4	182
GN 706.2-65-B40-AL	65	B40	15	M6	4	0.5	104

* Protrusion of cap thread.