Slotted locknuts

self-locking, with polyamide insert

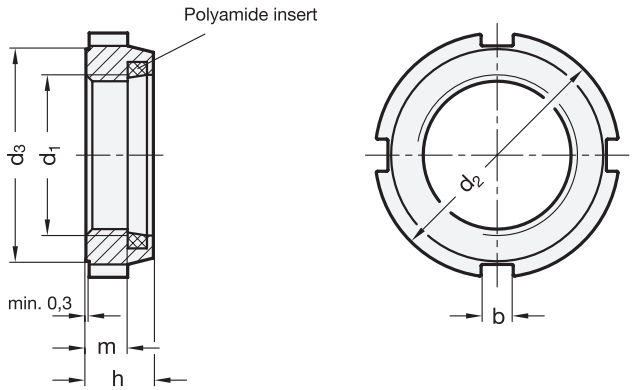

d_1 6H	d_2	d_3	b	h	m	Number of slots	C-Spanner
M 10 x 0,75	18	15	3	7,5	4,5	4	DIN 1810-A16-20
M 12 x 1	21	18	3	7,5	4,5	4	DIN 1810-A16-20
M 15 x 1	24	21	4	8,5	5,5	4	DIN 1810-A25-28
M 17 x 1	28	24	4	8,5	5,5	4	DIN 1810-A25-28
M 20 x 1	32	27	4	9,5	6,5	4	DIN 1810-A30-32
M 25 x 1,5	38	33	5	10,5	6,5	4	DIN 1810-A40-42
M 30 x 1,5	44	38	5	11	6,5	4	DIN 1810-A45-50
M 35 x 1,5	50	44	5	11	7	4	DIN 1810-A45-50
M 40 x 1,5	56	50	6	12	8,2	4	DIN 1810-A58-62
M 45 x 1,5	62	55	6	12	8,2	4	DIN 1810-A58-62
M 50 x 1,5	68	61	6	13	8,5	4	DIN 1810-A68-75
M 55 x 2	75	68	7	13,5	8,5	6	DIN 1810-A68-75
M 60 x 2	80	73	7	13,5	8,5	6	DIN 1810-A80-90

Specification

- Steel
  - Tensile strength class 5 (500 N/mm²)
  - zinc plated, blue passivated
- *Metric ISO fine thread → Page 1135*
- *Plastic characteristics → Page 1141*
- RoHS compliant

Accessory

- C-Spanner DIN 1810
  (Code no. see table)

Information

Slotted locknuts GN 1804.1 are self-locking owing to their polyamide insert. They can therefore also be used as a setting nut and may be used more than once.

The thread series corresponds to roller bearing slotted locknuts DIN 981.

How to order		
GN 1804.1-M30x1,5	1	d_1