GN 490 Twistable two-way clamp mountings

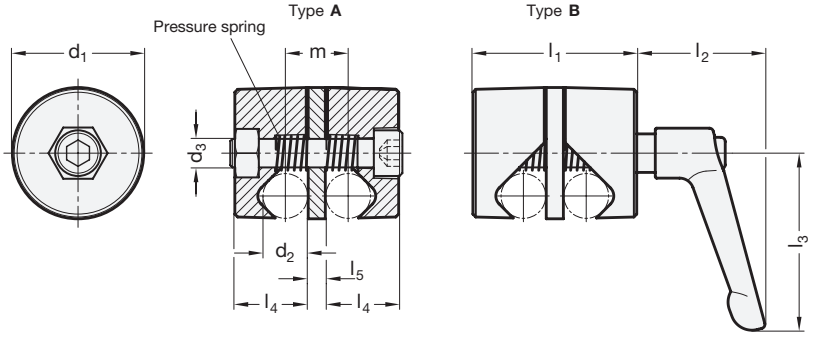

3 Type

A with cylinder head screw DIN 912

B with adjustable clamping lever GN 300.1

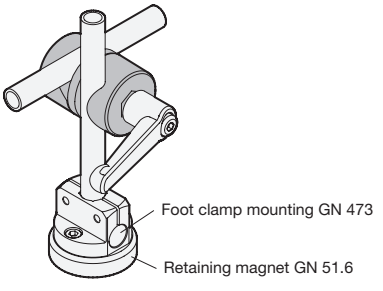

1 d_1	2 d_2 Clamping-Ø	d_3	l_1	l_2	l_3	l_4	l_5	m
28	8	M 6	33	35	45	14	5	13
32	10	M 8	45	45	63	20	5	15
36	12	M 8	47	45	63	21	5	17
46	16	M 10	57	55	78	27	6	22

Specification

4

- Aluminium
  - matt, slide grinded — MT
  - plastic coated black, RAL 9005, textured finish — SW
- Socket cap screws DIN 912 Stainless Steel AISI 304
- Hexagon nuts DIN 934 Stainless Steel AISI 304
- Adjustable clamping lever GN 300.1
  - Zinc die casting plastic coated silver, RAL 9006, textured finish
  - Insert / Distance bushing Stainless Steel AISI 303
- *Stainless Steel characteristics → Page XYZ*
- RoHS compliant

Information

Twistable two-way clamp mountings GN 490 clamp the rods or tubes via a prism, allowing a greater Ø tolerance to be bridged. The pressure spring makes clamping and releasing easier.

see also...

- *Two-way clamp mountings GN 474 → Page XYZ*
- *Twistable two-way clamp mountings GN 475 → Page XYZ*
- *Foot clamp mountings GN 473 → Page XYZ*

How to order

1 2 3 4

GN 490-32-10-A-SW

1	d_1
2	d_2
3	Type
4	Finish