GN 191.1

T-angle linear actuator connectors

- **Material**
  Aluminium.
- **Slide bush**
  Polyamide.
- **Finish**
  RAL 9005 black colour **SW**, matte finish, epoxy resin coating.
- **Clamping screw**
  - Identification no. **1**: with clamping screw DIN 912 and nut DIN 985, zinc-plated.
  - Identification no. **2**: with AISI 304 stainless steel-clamping screw DIN 912 and nut DIN 985.
- **Assembly**
  The standard clamping bolts are socket cap screws DIN 912, supplied assembled. They can be replaced by clamping kits GN 911 (description see table of dimensions).

Features and applications

T-angle linear actuator connectors GN 191.1 are normally supplied only in connection with a **mounted** linear actuator and for function control.
By means of the clamping screw on the guide bore d_1 (mechanically machined) d_1 the movement can either be set or the linear actuator connector can be clamped (after setting of final adjustment).

Accessories

- Construction tubings GN 990 (see page 109ff.).
- Linear actuators GN 291 (see page 119).
- Linear actuators GN 292 (see page 124).
- Clamping kits GN 911 (clamping handles GN 300.1 with distance bushing) see page 116.

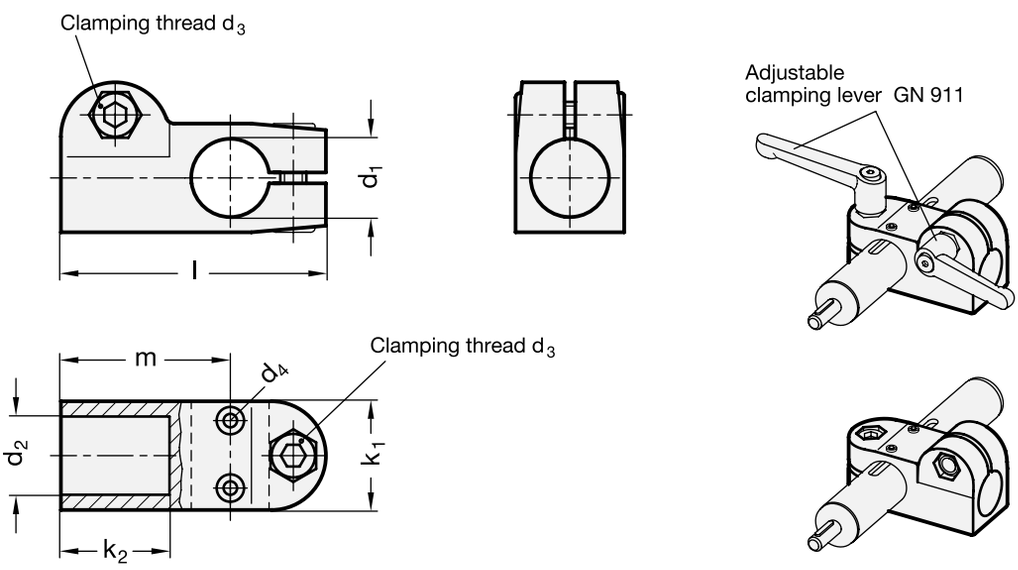

Standard Elements	Main dimensions									Clamping kits for d_3	⚖
Description	d_1 without slider bush	d_1 with slider bush	d_2	d_3	d_4 Mounting screw on the follower	k_1	k_2	l	m		g
GN 191.1-B18-B18-1-SW	B18	-	B18	M6	M3	25	25	61	39	GN 911-M6-22	80
GN 191.1-G18-B18-1-SW	-	G18	B18	M6	M3	25	25	61	39	GN 911-M6-22	77
GN 191.1-B18-B18-2-SW	B18	-	B18	M6	M3	25	25	61	39	GN 911-M6-22	80
GN 191.1-G18-B18-2-SW	-	G18	B18	M6	M3	25	25	61	39	GN 911-M6-22	77

elesa+GANTER ELESA and GANTER models all rights reserved in accordance with the law. Always mention the source when reproducing our drawings.