Adjustable hand levers

Handle zinc die casting / Internal parts Stainless Steel

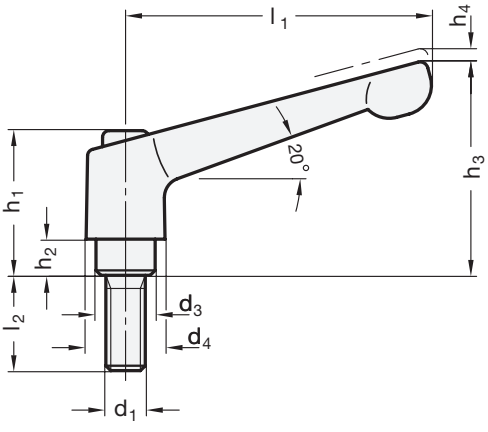

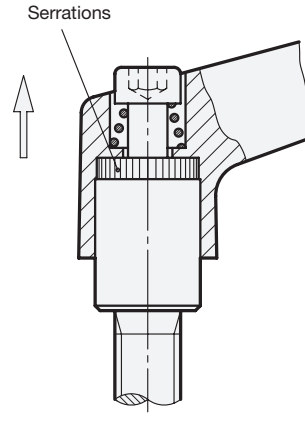

Inch sizes available

1 l_1	2 d_1		3 l_2							d_3	d_4	h_1	h_2	h_3	h_4 Stroke
30	M 3	-	6	8	10	12	16	-	-	10	13	24,5	4	31	3,5
30	M 4	-	12	16	20	25	32	-	-	10	13	24,5	4	31	3,5
30	M 5	M 6	12	16	20	25	32	40	50	10	13	24,5	4	31	3,5
45	M 4	-	12	16	20	25	32	-	-	10	13	24,5	4	35	3,5
45	M 5	M 6	12	16	20	25	32	40	50	10	13	24,5	4	35	3,5
63	M 6	M 8	16	20	25	32	40	50	63	13,5	17,5	31	6,5	45	4
78	M 8	M 10	20	25	32	40	50	63	80	16	21	36	8	55	4
92	M 10	M 12	20	25	32	40	50	63	80	19	24	43	11	65	4
108	M 16	-	32	40	50	63	80	-	-	23	30	50,5	12	76	5

Specification

4

- Handle
  Zinc die casting
- plastic coated
  black, RAL 9005, textured finish — SW
  black, RAL 9011, silk finish — SZ
  orange, RAL 2004, textured finish — OS
  red, RAL 3000, textured finish — RS
  silver, RAL 9006, textured finish — SR
- chrome-plated — CR
- uncoated — RH
  slide grinded
- Threaded stud and retaining screw
  Stainless Steel AISI 303
- *Stainless Steel characteristics → Page 1144*
- RoHS compliant

Information

Adjustable hand levers GN 300.1 are ideal whenever parts have to be clamped in a confined space or in a particular lever position. The centre insert is connected to the lever via serrations which can easily be disengaged.

Pulling the lever, disengages the serrations and allowing it to be swivelled to the ideal clamping position. On releasing the lever the serrations automatically re-engage.

see also...
- *Adjustable hand levers GN 300 (insert steel) → Page 197*
- *Adjustable hand levers GN 300.5 (Stainless Steel) → Page 201*

How to order

1 2 3 4
GN 300.1-63-M8-32- RS

1	l_1
2	d_1
3	l_2
4	Colour (Finish)