GN 927

Clamping levers with eccentrical cam

RoHS

- **Lever body**
  Zinc alloy die-cast.
- **Colour**
  RAL 9005 black matte finish, epoxy resin coating.
- **Rotation pin**
  Zinc-plated steel.
- **Tapped bushing**
  Zinc-plated steel.
- **Contact plate**
  - Type **A**: glass-fibre reinforced acetal resin based (POM) technopolymer with adjustable contact plate.
  - Type **B**: glass-fibre reinforced (PPS) technopolymer with non-adjustable contact plate.
- **Knurled base**
  Zinc-plated steel.
- **Clamping element**
  Zinc-plated steel with threaded stud.

product design award 2007

Features and applications

Clamping levers with eccentrical cam GN 927 are used for rapid clamping and releasing operations. Hereby, contrary to a clamping operation via a thread, these levers permit a torque-free clamping.
The lever has been designed to ensure that its movement cannot exceed the max. clamping position.
There are no loose components since they are all assembled and mounted in their correct order.
The salient points of type A are as follows: the distance between the eccentrical cam and the contact surface is adjustable by means of a fine threaded knurled nut. This allows the max. clamping force to be set by a simple adjustment. In addition this also allows the choice of the preferred lever position in relation to the clamping lever pin.
With these clamping levers with eccentrical cam, thrusts of up to 8kN can be reached.

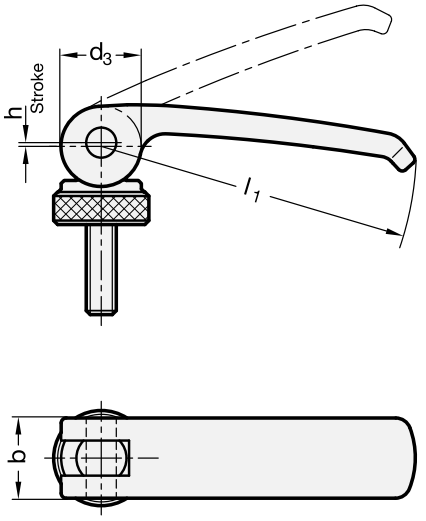

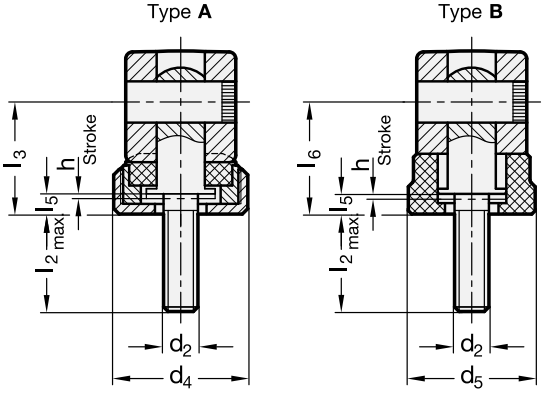

ELESA and GANTER models all rights reserved in accordance with the law. Always mention the source when reproducing our drawings.

Standard Elements	Main dimensions												Thread		⚖
Description	l_1	b	d_3	d_4	d_5	h	$l_{3\,min.}$	$l_{3\,max.}$	l_4	l_5	l_6	t	d_1	l_2	g
GN 927-63-M5-16-*	63	16	16	19	18.5	0.75	16.3	18.8	2.5	3	16.3	10	M5	16	50
GN 927-63-M5-20-*	63	16	16	19	18.5	0.75	16.3	18.8	2.5	3	16.3	10	M5	20	55
GN 927-63-M5-25-*	63	16	16	19	18.5	0.75	16.3	18.8	2.5	3	16.3	10	M5	25	56
GN 927-63-M5-35-*	63	16	16	19	18.5	0.75	16.3	18.8	2.5	3	16.3	10	M5	35	62
GN 927-63-M5-40-*	63	16	16	19	18.5	0.75	16.3	18.8	2.5	3	16.3	10	M5	40	63
GN 927-63-M5-50-*	63	16	16	19	18.5	0.75	16.3	18.8	2.5	3	16.3	10	M5	50	65
GN 927-63-M6-16-*	63	16	16	19	18.5	0.75	16.3	18.8	2.5	3	16.3	10	M6	16	60
GN 927-63-M6-20-*	63	16	16	19	18.5	0.75	16.3	18.8	2.5	3	16.3	10	M6	20	61
GN 927-63-M6-25-*	63	16	16	19	18.5	0.75	16.3	18.8	2.5	3	16.3	10	M6	25	63
GN 927-63-M6-30-*	63	16	16	19	18.5	0.75	16.3	18.8	2.5	3	16.3	10	M6	30	64
GN 927-63-M6-35-*	63	16	16	19	18.5	0.75	16.3	18.8	2.5	3	16.3	10	M6	35	65
GN 927-63-M6-40-*	63	16	16	19	18.5	0.75	16.3	18.8	2.5	3	16.3	10	M6	40	66
GN 927-63-M6-50-*	63	16	16	19	18.5	0.75	16.3	18.8	2.5	3	16.3	10	M6	50	68
GN 927-82-M6-20-*	82	20	20	25	22.5	1	19.5	22.5	3	3.7	19.5	12	M6	20	120
GN 927-82-M6-25-*	82	20	20	25	22.5	1	19.5	22.5	3	3.7	19.5	12	M6	25	120
GN 927-82-M6-30-*	82	20	20	25	22.5	1	19.5	22.5	3	3.7	19.5	12	M6	30	120
GN 927-82-M6-35-*	82	20	20	25	22.5	1	19.5	22.5	3	3.7	19.5	12	M6	35	120
GN 927-82-M6-40-*	82	20	20	25	22.5	1	19.5	22.5	3	3.7	19.5	12	M6	40	120
GN 927-82-M6-50-*	82	20	20	25	22.5	1	19.5	22.5	3	3.7	19.5	12	M6	50	122
GN 927-82-M6-60-*	82	20	20	25	22.5	1	19.5	22.5	3	3.7	19.5	12	M6	60	122
GN 927-82-M8-20-*	82	20	20	25	22.5	1	19.5	22.5	3	3.7	19.5	12	M8	20	123
GN 927-82-M8-25-*	82	20	20	25	22.5	1	19.5	22.5	3	3.7	19.5	12	M8	25	123
GN 927-82-M8-30-*	82	20	20	25	22.5	1	19.5	22.5	3	3.7	19.5	12	M8	30	124
GN 927-82-M8-35-*	82	20	20	25	22.5	1	19.5	22.5	3	3.7	19.5	12	M8	35	125
GN 927-82-M8-40-*	82	20	20	25	22.5	1	19.5	22.5	3	3.7	19.5	12	M8	40	128
GN 927-82-M8-50-*	82	20	20	25	22.5	1	19.5	22.5	3	3.7	19.5	12	M8	50	131
GN 927-82-M8-60-*	82	20	20	25	22.5	1	19.5	22.5	3	3.7	19.5	12	M8	60	134
GN 927-101-M8-20-*	101	25	26	30	27	1.5	25.3	29.3	4	4.8	25.3	15	M8	20	224
GN 927-101-M8-25-*	101	25	26	30	27	1.5	25.3	29.3	4	4.8	25.3	15	M8	25	227
GN 927-101-M8-30-*	101	25	26	30	27	1.5	25.3	29.3	4	4.8	25.3	15	M8	30	227
GN 927-101-M8-35-*	101	25	26	30	27	1.5	25.3	29.3	4	4.8	25.3	15	M8	35	228
GN 927-101-M8-40-*	101	25	26	30	27	1.5	25.3	29.3	4	4.8	25.3	15	M8	40	232
GN 927-101-M8-50-*	101	25	26	30	27	1.5	25.3	29.3	4	4.8	25.3	15	M8	50	233
GN 927-101-M8-60-*	101	25	26	30	27	1.5	25.3	29.3	4	4.8	25.3	15	M8	60	237
GN 927-101-M10-20-*	101	25	26	30	27	1.5	25.3	29.3	4	4.8	25.3	15	M10	20	230
GN 927-101-M10-25-*	101	25	26	30	27	1.5	25.3	29.3	4	4.8	25.3	15	M10	25	231
GN 927-101-M10-30-*	101	25	26	30	27	1.5	25.3	29.3	4	4.8	25.3	15	M10	30	234
GN 927-101-M10-35-*	101	25	26	30	27	1.5	25.3	29.3	4	4.8	25.3	15	M10	35	237
GN 927-101-M10-40-*	101	25	26	30	27	1.5	25.3	29.3	4	4.8	25.3	15	M10	40	238
GN 927-101-M10-50-*	101	25	26	30	27	1.5	25.3	29.3	4	4.8	25.3	15	M10	50	242
GN 927-101-M10-60-*	101	25	26	30	27	1.5	25.3	29.3	4	4.8	25.3	15	M10	60	250

* Complete the description of the standard item needed by adding the index of the contact plate: A (with adjustable contact plate) or B (with non-adjustable contact plate).

ELESA and GANTER models all rights reserved in accordance with the law. Always mention the source when reproducing our drawings.