# GN 586

## *Load rings (rotating)*

RoHS

- **Load ring**
  High-tensile forged tempered steel with pink plastic surface coating, 100% electro-magnetic tensile tested to EN 1677.
- **Fixing holder**
  High-tensile forged tempered steel with pink plastic surface coating, 100% electro-magnetic tensile tested to EN 1677.
- **Bushing**
  Zinc-plated steel, blue passivated.
- **Bolt**
  Steel (tensile strength 1000 N/mm²), finish Delta Tone.

***Features***

The load rings GN 586 can be folded and rotated into all directions, carrying the full load in any tension direction.
They offer a high load carrying capacity and they are tested to meet safety standards (safety factor 4).
The rated load carrying capacity listed in the above table is clearly marked on the attachment bolt. It applies to the most unfavourable load application of the load types listed opposite.
Load rings GN 586 comply with Mechanical Engineering Directive 2006 / 42 / EG and are BG tested.



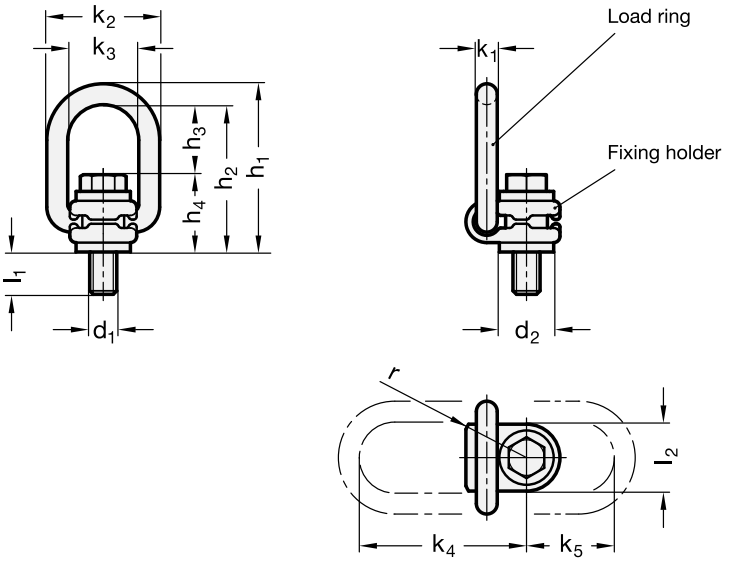


| Standard Elements | Main dimensions | | | | | | | | | | | | | | Tightening torque | Nominal load in t | ⚖ |
|---|---|---|---|---|---|---|---|---|---|---|---|---|---|---|---|---|---|
| Description | $d_1$ | $d_2$ | $h_1$ | $h_2$ | $h_3$ | $h_4$ | $k_1$ | $k_2$ | $k_3$ | $k_4$ | $k_5$ | $l_1$ | $l_2$ | r | in Nm | | g |
| GN 586-M8 | M8 | 24 | 85 | 75 | 40 | 35 | 10 | 54 | 34 | 75 | 45 | 11 | 30 | 32 | 30 | 0.3 | 290 |
| GN 586-M10 | M10 | 24 | 85 | 75 | 39 | 36 | 10 | 54 | 34 | 75 | 45 | 16 | 30 | 32 | 60 | 0.63 | 300 |
| GN 586-M12 | M12 | 26 | 85 | 75 | 38 | 37 | 10 | 54 | 34 | 75 | 45 | 21 | 32 | 32 | 100 | 1 | 326 |
| GN 586-M16 | M16 | 30 | 99 | 85 | 39 | 46 | 13.5 | 56 | 36 | 87 | 47 | 24 | 33 | 38 | 150 | 1.5 | 500 |
| GN 586-M20 | M20 | 45 | 127 | 110 | 55 | 55 | 16.5 | 82 | 54 | 113 | 64 | 32 | 50 | 48 | 250 | 2.5 | 1185 |
| GN 586-M24 | M24 | 45 | 143 | 125 | 67 | 58 | 18 | 82 | 54 | 130 | 78 | 37 | 50 | 48 | 400 | 4 | 1314 |
| GN 586-M30 | M30 | 60 | 170 | 147 | 67 | 80 | 22.5 | 103 | 65 | 151 | 80 | 49 | 60 | 67 | 500 | 5 | 3000 |

elesa+GANTER ELESA and GANTER models all rights reserved in accordance with the law. Always mention the source when reproducing our drawings.

## Load capacity

| Method of mounting | | | | | | | | 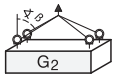 | | |
|---|---|---|---|---|---|---|---|---|---|---|
| **Number** | 1 | 1 | 2 | 2 | 2 | 2 | 2 | 3 and 4 | 3 and 4 | 3 and 4 |
| **Angles of inclination** | 0° | 90° | 0° | 90° | 0° to 45° | 45° to 60° | asymmetrical | 0° to 45° | 45° to 60° | asymmetrical |
| **Factor** | 1 | 1 | 2 | 2 | 1.4 | 1 | 1 | 2.1 | 1.5 | 1 |
| **M8** | 0.30 t | 0.30 t | 0.60 t | 0.60 t | 0.42 t | 0.30 t | 0.30 t | 0.63 t | 0.45 t | 0.30 t |
| **M10** | 0.63 t | 0.63 t | 1.26 t | 1.26 t | 0.88 t | 0.63 t | 0.63 t | 1.32 t | 0.95 t | 0.63 t |
| **M12** | 1.00 t | 1.00 t | 2.00 t | 2.00 t | 1.40 t | 1.00 t | 1.00 t | 2.10 t | 1.50 t | 1.00 t |
| **M16** | 1.50 t | 1.50 t | 3.00 t | 3.00 t | 2.10 t | 1.50 t | 1.50 t | 3.15 t | 2.25 t | 1.50 t |
| **M20** | 2.50 t | 2.50 t | 5.00 t | 5.00 t | 3.50 t | 2.50 t | 2.50 t | 5.25 t | 3.75 t | 2.50 t |
| **M24** | 4.00 t | 4.00 t | 8.00 t | 8.00 t | 5.60 t | 4.00 t | 4.00 t | 8.40 t | 6.00 t | 4.00 t |
| **M30** | 5.00 t | 5.00 t | 10.00 t | 10.00 t | 7.00 t | 5.00 t | 5.00 t | 10.50 t | 7.50 t | 5.00 t |

***Safety instructions***

The above details specify the maximum load in metric tonnes, with the rotating load ring GN 586 fixed in place and set in load direction.

The contact surface of the rotating load ring GN 586 must be flat and at a right angle to the tapped bore.

When fixed to the member, the attachment bolt must be allowed to rotate freely by 360°. Only the hexagonal bolt supplied with the load ring may be used.

The load ring must move freely and must not be supported by edges.

Before applying the load, both the load ring and the attachment bolt must be turned in load direction, observing the permissible loading depending on the direction of the load ring. Rotating load rings are not suitable for frequent rotations under load.

The specified loading values are valid for a minimum bolt embedment depth of 1,5 x nominal thread diameter in steel with a minimum tensile strength of 37 kp/mm$^2$ at an operating temperature of between -40 °C and +100 °C.
Load capacities under different conditions provided on request.

Operating instructions with more details and specifications are included with every delivery.

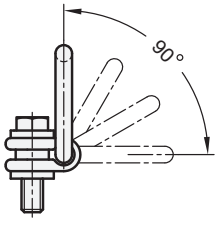


ELESA and GANTER models all rights reserved in accordance with the law. Always mention the source when reproducing our drawings.