ERS.

ERGOSTYLE®

ELESA Original design

Safety adjustable handles with push action

RoHS PA +130° -30°

- **Lever body**
  Glass-fibre reinforced polyamide based (PA) technopolymer, with "PUSH" tampoprinted in red colour (avoid contact with solvents, alcohol or detergents containing alcohol).
- **Colour**
  Grey-black, matte finish.
- **Standard executions**
  Glass-fibre reinforced technopolymer, black colour, with knurling on the protruding part to make initial tightening easier. Black-oxide steel retaining screw, AISI 302 stainless steel return spring.
  - **ERS-A**: black-oxide boss, threaded blind hole.
  - **ERS-B**: brass boss, threaded blind hole.

Features and applications
Particularly suitable when the lever turning angle is limited owing to lack of space and to avoid any accidental shocks which may affect the clamping action.

Stress resistance
See ERX. on page 106.

Instructions of use
For clamping push the lever to engage the clamping device toothing and turn it. By releasing the lever, the return spring automatically disengages the toothing and lever return to its rest position.
In case of accidental shocks, the lever turns freely without affecting the clamping action enabling the operator to manoeuvre in safety.

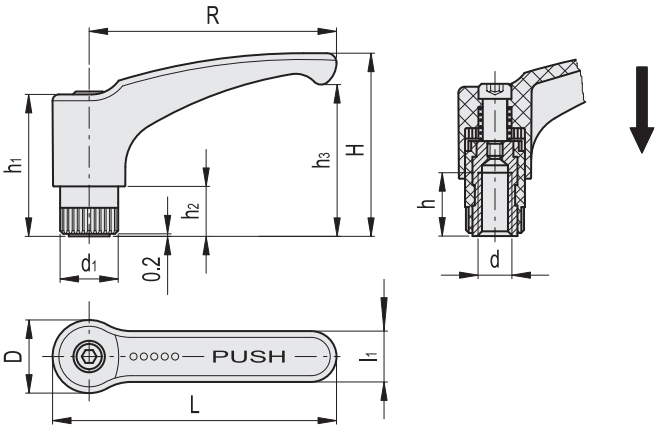

Standard Elements		Main dimensions									Mounting hole		Teeth no.	⚖
Code	Description	R	L	D	H	h_1	h_2	h_3	d_1	l_1	d 6H	h	z	g
236902	ERS.44 A-M4	44	52	15.5	36	29	9	28	12	11	M4	10	18	14
236903	ERS.44 A-M5	44	52	15.5	36	29	9	28	12	11	M5	10	18	13
236904	ERS.44 A-M6	44	52	15.5	36	29	9	28	12	11	M6	10	18	12
236913	ERS.63 A-M6	63	73.5	19	48	37	12	37	15	13.5	M6	13	20	25
236914	ERS.63 A-M8	63	73.5	19	48	37	12	37	15	13.5	M8	13	20	24
236935	ERS.63 B-M8	63	73.5	19	48	37	12	37	15	13.5	M8	13	20	24

elesa+GANTER ELESA and GANTER models all rights reserved in accordance with the law. Always mention the source when reproducing our drawings.