# VLSK

ELESA Original design

## *Security lobe knobs with lock*

RoHS PA +100° -30°

- **Lobe solid cap**
  Glass-fibre reinforced polyamide based (PA) technopolymer with slot for codified key lock. Resistant to solvents, oils, greases and other chemical agents.
- **Central closing cap**
  Technopolymer black colour.
- **Flange**
  Technopolymer, ultrasonically welded.
- **Colour**
  Black, matte finish.
- **Clamping element**
  Glass-fibre reinforced polyamide based (PA) SUPER-tecnopolymer.
- **Lock and keys**
  Die cast zinc alloy rotor ans stator.
  The lock has got a red protection tab for closing the lock when the key is not inserted.
  Two keys made out of nickel-plated brass and technopolymer.
  210 different combinations; each lock has got one pair of keys, removable in two positions at 180°.
- **Standard executions**
  - **VLSK-B**: brass boss, threaded pass-through hole, with cap.
  - **VLSK-FP**: brass boss, threaded pass-through hole, without cap.
  - **VLSK-p**: zinc-plated steel threaded stud, chamfered flat end UNI 947 : ISO 4753, with cap.



### *Security device operation*

VLSK. security lobe knob has been designed to prevent its unscrewing by unauthorised people. Therefore, it has got a vandal-proof function as well.
For clamping and unscrewing the knob, insert the special key into the lock and turn it by 180°. By so doing the clamping element and the knob form a single body. When the lock is brought back to the starting position and the key is removed, the knob turns freely preventing the unscrewing.

### *Features and application*

The particular design of the internal device and of the flange helps the drainage of any dirt (dust, earth or liquid).

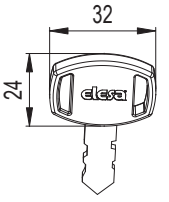


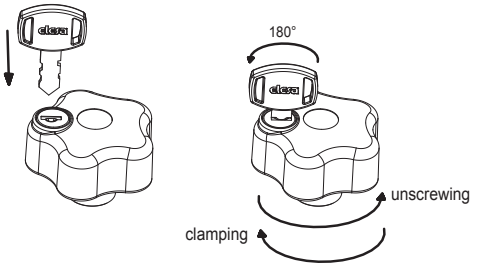


ELESA and GANTER models all rights reserved in accordance with the law. Always mention the source when reproducing our drawings.

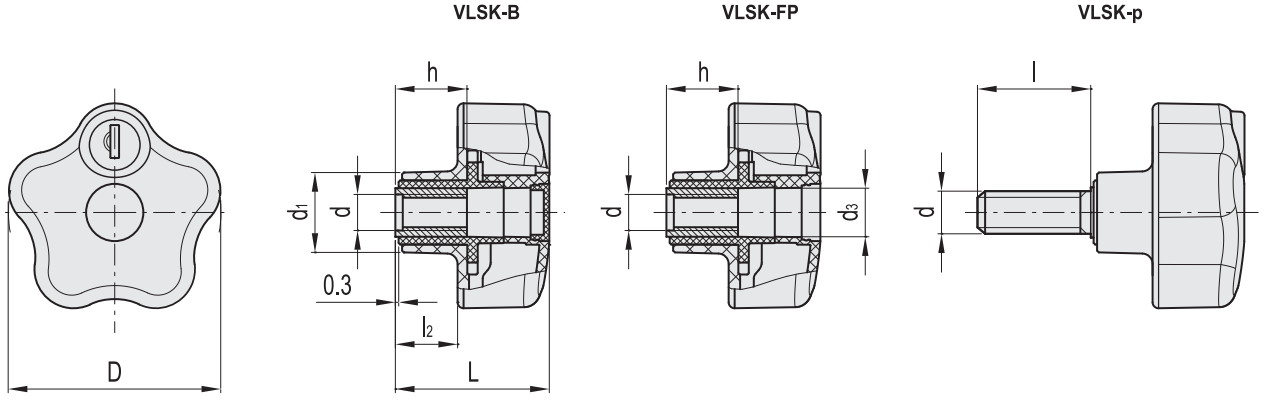


| Standard Elements | | Main dimensions | | | | Mounting hole | | ⚖ |
|---|---|---|---|---|---|---|---|---|
| Code | Description | D | L | $l_2$ | $d_1$ | $d_{6H}$ | h | g |
| 76701 | VLSK.63 B-M6 | 63 | 44 | 17 | 23 | M6 | 18 | 95 |
| 76702 | VLSK.63 B-M8 | 63 | 44 | 17 | 23 | M8 | 18 | 94 |
| 76703 | VLSK.63 B-M10 | 63 | 44 | 17 | 23 | M10 | 20 | 93 |

| Standard Elements | | Main dimensions | | | | | Mounting hole | | ⚖ |
|---|---|---|---|---|---|---|---|---|---|
| Code | Description | D | L | $l_2$ | $d_1$ | $d_3$ | $d_{6H}$ | h | g |
| 76711 | VLSK.63 FP-M6 | 63 | 44 | 17 | 23 | 14 | M6 | 18 | 95 |
| 76712 | VLSK.63 FP-M8 | 63 | 44 | 17 | 23 | 14 | M8 | 18 | 94 |
| 76713 | VLSK.63 FP-M10 | 63 | 44 | 17 | 23 | 14 | M10 | 20 | 93 |

| Standard Elements | | Main dimensions | | | | Threaded stud | | ⚖ |
|---|---|---|---|---|---|---|---|---|
| Code | Description | D | L | $l_2$ | $d_1$ | $d_{6g}$ | l | g |
| 76731 | VLSK.63 p-M8x20 | 63 | 44 | 17 | 23 | M8 | 20 | 106 |
| 76741 | VLSK.63 p-M10x20 | 63 | 44 | 17 | 23 | M10 | 20 | 107 |

ELESA and GANTER models all rights reserved in accordance with the law. Always mention the source when reproducing our drawings.