# GN 343.5

INOX Stainless Steel

ESD

EXTENDED RANGE

## *Levelling elements*

RoHS

- **Base**
  AISI 303 stainless steel.
  - Version **OS**: without plastic cap.
  - Version **KS**: with natural white colour thermoplastic cap (Polyacetal POM), gliding.
  - Version **KR**: with 73 Shore hardness thermoplastic rubber cap (Santoprene©), not-gliding.
  - Version **KSE**: with natural white colour thermoplastic cap (Polyacetal POM), gliding, electrically conductive (antistatic).
  - Version **KRE**: with 73 Shore hardness thermoplastic rubber cap (Santoprene©), not-gliding, electrically conductive (antistatic).
- **Ball joint**
  AISI 303 stainless steel, supplied assembled.
- **Specification of KSE / KRE**
  Surface resistivity: < $10^6$ Ω
  Volume resistivity: < $10^7$ Ω
  DIN EN 61340-5-1 / 61340-2-3

### *Features and applications*

The static load of the GN 343.5 levelling element is limited by the load capacity of the ball joint (tensile strength 500 N/mm²).
The static load values shown in the table below refer to a net vertical load in relation to the ball socket and refer only to type OS, KS and KSE. Under normal operating conditions side loading or angular loading is not uncommon and the load capacity would be considerably reduced.
For higher loads, GN 343.5 should be used in conjunction with screws of higher tensile strength. We suggest the use of DIN 915 threaded stud with pressure pad. This pressure pad must be seated squarely at the bottom of the threaded hole, which will increase the load capacity of the ball in the socket.
Stainless steel, thanks to its high resistance to corrosion, allows the application of these levelling elements on machines and equipment in those sectors where laws or particular hygienic, climatic and environmental factors make it mandatory to use corrosion resistant materials.

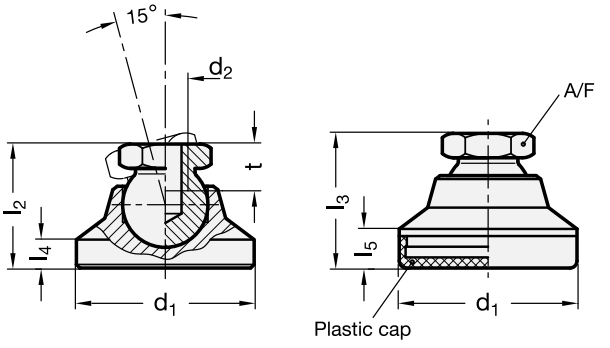


| Standard Elements | Main dimensions | | | | | Threaded hole | | Wrench | Static load # in kN | ⚖ |
|---|---|---|---|---|---|---|---|---|---|---|
| Description | $d_1$ | $l_2$ | $l_3$ | $l_4$ | $l_5$ | $d_2$ | t min. | A/F | | g |
| GN 343.5-25-M6-KR | 25 | - | 20.5 | - | 5.5 | M6 | 9 | 12 | 4 | 35 |
| GN 343.5-25-M8-KR | 25 | - | 20.5 | - | 5.5 | M8 | 9 | 12 | 10 | 30 |
| GN 343.5-32-M8-KR | 32 | - | 24.5 | - | 6.5 | M8 | 9 | 12 | 10 | 75 |
| GN 343.5-32-M10-KR | 32 | - | 24.5 | - | 6.5 | M10 | 10.5 | 15 | 20 | 65 |
| GN 343.5-40-M10-KR | 40 | - | 27.5 | - | 7.5 | M10 | 10.5 | 15 | 20 | 120 |
| GN 343.5-40-M12-KR | 40 | - | 27.5 | - | 7.5 | M12 | 11.5 | 17 | 30 | 110 |
| GN 343.5-50-M10-KR | 50 | - | 29.5 | - | 8.5 | M10 | 10.5 | 15 | 20 | 185 |
| GN 343.5-50-M12-KR | 50 | - | 29.5 | - | 8.5 | M12 | 11.5 | 17 | 30 | 175 |
| GN 343.5-60-M12-KR | 60 | - | 37.5 | - | 10 | M12 | 11.5 | 17 | 30 | 335 |
| GN 343.5-60-M16-KR | 60 | - | 37.5 | - | 10 | M16 | 16 | 24 | 30 | 305 |
| GN 343.5-25-M6-KS | 25 | - | 20.5 | - | 5.5 | M6 | 9 | 12 | 4 | 35 |
| GN 343.5-25-M8-KS | 25 | - | 20.5 | - | 5.5 | M8 | 9 | 12 | 7 | 30 |
| GN 343.5-32-M8-KS | 32 | - | 24.5 | - | 6.5 | M8 | 9 | 12 | 7 | 75 |
| GN 343.5-32-M10-KS | 32 | - | 24.5 | - | 6.5 | M10 | 10.5 | 15 | 11 | 65 |
| GN 343.5-40-M10-KS | 40 | - | 27.5 | - | 7.5 | M10 | 10.5 | 15 | 11 | 120 |
| GN 343.5-40-M12-KS | 40 | - | 27.5 | - | 7.5 | M12 | 11.5 | 17 | 16 | 110 |
| GN 343.5-50-M10-KS | 50 | - | 29.5 | - | 8.5 | M10 | 10.5 | 15 | 11 | 185 |
| GN 343.5-50-M12-KS | 50 | - | 29.5 | - | 8.5 | M12 | 11.5 | 17 | 16 | 175 |
| GN 343.5-60-M12-KS | 60 | - | 37.5 | - | 10 | M12 | 11.5 | 17 | 16 | 335 |
| GN 343.5-60-M16-KS | 60 | - | 37.5 | - | 10 | M16 | 16 | 24 | 30 | 325 |

elesa+GANTER ELESA and GANTER models all rights reserved in accordance with the law. Always mention the source when reproducing our drawings.

| Standard Elements | Main dimensions | | | | | Threaded hole | | Wrench | Static load # in kN | ⚖ |
|---|---|---|---|---|---|---|---|---|---|---|
| Description | $d_1$ | $l_2$ | $l_3$ | $l_4$ | $l_5$ | $d_2$ | t min. | A/F | | g |
| GN 343.5-25-M6-OS | 25 | 19 | - | 4 | - | M6 | 9 | 12 | 4 | 30 |
| GN 343.5-25-M8-OS | 25 | 19 | - | 4 | - | M8 | 9 | 12 | 7 | 35 |
| GN 343.5-32-M8-OS | 32 | 23 | - | 5 | - | M8 | 9 | 12 | 7 | 55 |
| GN 343.5-32-M10-OS | 32 | 23 | - | 5 | - | M10 | 10.5 | 15 | 11 | 65 |
| GN 343.5-40-M10-OS | 40 | 26 | - | 6 | - | M10 | 10.5 | 15 | 11 | 120 |
| GN 343.5-40-M12-OS | 40 | 26 | - | 6 | - | M12 | 11.5 | 17 | 16 | 110 |
| GN 343.5-50-M10-OS | 50 | 28 | - | 7 | - | M10 | 10.5 | 15 | 11 | 190 |
| GN 343.5-50-M12-OS | 50 | 28 | - | 7 | - | M12 | 11.5 | 17 | 16 | 180 |
| GN 343.5-60-M12-OS | 60 | 36 | - | 8.5 | - | M12 | 11.5 | 17 | 16 | 340 |
| GN 343.5-60-M16-OS | 60 | 36 | - | 8.5 | - | M16 | 16 | 24 | 30 | 325 |
| GN 343.5-25-M6-KRE | 25 | - | 20.5 | - | 5.5 | M6 | 9 | 12 | 4 | 35 |
| GN 343.5-25-M8-KRE | 25 | - | 20.5 | - | 5.5 | M8 | 9 | 12 | 10 | 30 |
| GN 343.5-32-M8-KRE | 32 | - | 24.5 | - | 6.5 | M8 | 9 | 12 | 10 | 75 |
| GN 343.5-32-M10-KRE | 32 | - | 24.5 | - | 6.5 | M10 | 10.5 | 15 | 20 | 65 |
| GN 343.5-40-M10-KRE | 40 | - | 27.5 | - | 7.5 | M10 | 10.5 | 15 | 20 | 120 |
| GN 343.5-40-M12-KRE | 40 | - | 27.5 | - | 7.5 | M12 | 11.5 | 17 | 30 | 110 |
| GN 343.5-50-M10-KRE | 50 | - | 29.5 | - | 8.5 | M10 | 10.5 | 15 | 20 | 185 |
| GN 343.5-50-M12-KRE | 50 | - | 29.5 | - | 8.5 | M12 | 11.5 | 17 | 30 | 175 |
| GN 343.5-60-M12-KRE | 60 | - | 37.5 | - | 10 | M12 | 11.5 | 17 | 30 | 335 |
| GN 343.5-60-M16-KRE | 60 | - | 37.5 | - | 10 | M16 | 16 | 24 | 30 | 305 |
| GN 343.5-25-M6-KSE | 25 | - | 20.5 | - | 5.5 | M6 | 9 | 12 | 4 | 35 |
| GN 343.5-25-M8-KSE | 25 | - | 20.5 | - | 5.5 | M8 | 9 | 12 | 7 | 30 |
| GN 343.5-32-M8-KSE | 32 | - | 24.5 | - | 6.5 | M8 | 9 | 12 | 7 | 75 |
| GN 343.5-32-M10-KSE | 32 | - | 24.5 | - | 6.5 | M10 | 10.5 | 15 | 11 | 65 |
| GN 343.5-40-M10-KSE | 40 | - | 27.5 | - | 7.5 | M10 | 10.5 | 15 | 11 | 120 |
| GN 343.5-40-M12-KSE | 40 | - | 27.5 | - | 7.5 | M12 | 11.5 | 17 | 16 | 110 |
| GN 343.5-50-M10-KSE | 50 | - | 29.5 | - | 8.5 | M10 | 10.5 | 15 | 11 | 185 |
| GN 343.5-50-M12-KSE | 50 | - | 29.5 | - | 8.5 | M12 | 11.5 | 17 | 16 | 175 |
| GN 343.5-60-M12-KSE | 60 | - | 37.5 | - | 10 | M12 | 11.5 | 17 | 16 | 335 |
| GN 343.5-60-M16-KSE | 60 | - | 37.5 | - | 10 | M16 | 16 | 24 | 30 | 325 |

# Static load stand for the value over which the applied load to the element, in certain use conditions, may cause plastic material deformation.

ELESA and GANTER models all rights reserved in accordance with the law. Always mention the source when reproducing our drawings.