GN 315.1

Snap locks

RoHS

- **Lock housing**
  Zinc alloy die-cast, corrision-resistant ZNDG Pass. nano-coating, anthraccite coloured.
- **Locating ring**
  Additionally epoxy resin coating.
  RAL 9005 black, matte finish.
- **Slide**
  Polyamide based (PA) technopolymer, plastic, black matte finish.
- **Push button**
  Polyamide based (PA) technopolymer, plastic, light grey.
- **Hexagon nut**
  Zinc-plated steel.
- **Accessories on request**
  Opening handle GN 320 (see page 627).

Assembly instructions

With these snap locks, doors or flaps can be locked but not clamped in place. For this reason it is important that the closing distance A (door + sash width) is accurately positioned.
To mount, set a borehole in the door as shown in the outline drawing opposite. The snap lock can be pushed through the borehole from the front, the hex nut can be fitted from the back.
For bringing in the assembly drilling, the sheet metal punch GN 123 (see catalogue 038, page 881) is suitable.

Features and applications

Snap locks GN 315.1 are characterised by a radial, spring-loaded slide causing the locking action. When the door is closed, the locking action sets in automatically: the chamfered slide is first pushed back via an appropriately arranged lug and then moved into the locking position by the pressure spring. The door is unlocked via the push button.
To operate the doors, these snap locks are fitted with an operating button.
If no operating element is needed to operate the door or if such element is arranged separately, GN 315.1 snap locks are used in every other instance
The installation bore diamtere can also be set by drilling / milling.

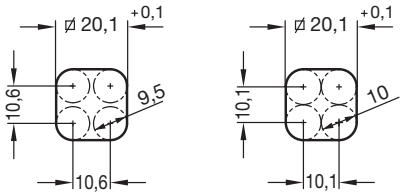

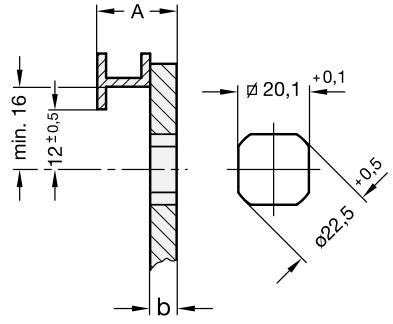

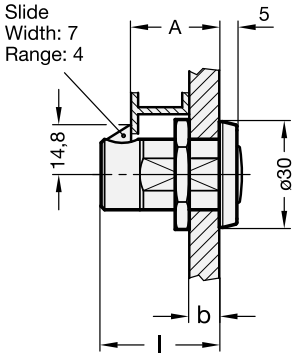

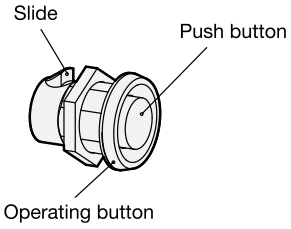

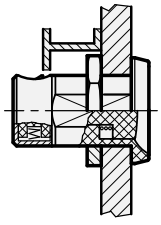

Standard Elements	Main dimensions			⚖
Description	A Adjusting distance	b max. thickness of the door	l	g
GN 315.1-20	20	12	28.5	60
GN 315.1-25	25	17	33.5	80

ELESA and GANTER models all rights reserved in accordance with the law. Always mention the source when reproducing our drawings.