VRTP+I

ELESA Original design

Spoked handwheels with revolving handle

PP PA TPE +80° 0° RoHS

- **Material**
  High-resilience polypropylene based (PP) technopolymer. Resistant to solvents, oils, greases and other chemical agents.
- **Colour**
  Black, matte finish.
- **Boss-cap**
  Anodised aluminium self-adhesive front plate.
  VRTP.375: cover in polyester based technopolymer (PBT), grey colour RAL 7035, glossy finish. Provided with the supply, press-fit assembly, removable by pressing on the outer edge (ELESA original design).
- **Standard execution**
  Black-oxide steel boss, H7 reamed hole.
  - **VRTP+I**: with revolving handle I.621+x (see catalogue 038, page 397) in polyamide based (PA) technopolymer, black colour, matte finish.
  - **VRTP+IEL**: with revolving handle IEL.+x-SOFT in technopolymer coated with "soft-touch" thermoplastic elastomer (TPE), black colour, matte finish.

Accessories on request

- Axial retaining washer type GN 184 (see catalogue 038, page 631).
- VRTP.125, VRTP.160 and VRTP.200 are available also with boss caps in one of the Ergostyle colours (see table).

Special executions on request

Bosses with hole and keyway in compliance with DIN 6885/1 P9 tolerance (see catalogue 038, page A17).
To order the handwheel with keyway complete code and description with the index -K (i.e. 78421-R-K VRTP.80+I A-8-K).

Code	Description	Boss cap for
29552-*	ECB.T2-*	VRTP.125
29553-*	ECB.T3-*	VRTP.160
29554-*	ECB.T4-*	VRTP.200

* Complete with colour index (C1,....,C6).

C1	C2	C3	C4	C5	C6
RAL7021	*RAL2004*	*RAL7035*	*RAL1021*	*RAL5024*	*RAL3000*

ELESA and GANTER models all rights reserved in accordance with the law. Always mention the source when reproducing our drawings.

VRTP+I

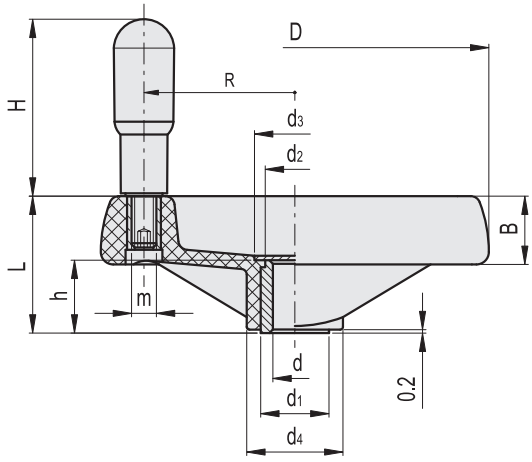

VRTP+IEL

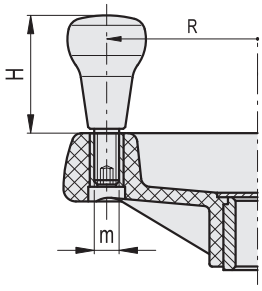

Standard Elements		Main dimensions							Bore		Handle			C #	L #	⚖
Code	Description	D	L	B	d_1	d_2	d_3	d_4	d H7	h	H	m	R	[Nm]	[J]	g
78421-R	VRTP.80+I A-8	80	35	18	18	16	20.5	25	8	17	45	M6	29	32	5	104
78422-R	VRTP.80+I A-10	80	35	18	18	16	20.5	25	10	17	45	M6	29	32	5	100
78520-R	VRTP.100+I A-8	99	37	20	18	16	20.5	25.5	8	17	60	M6	37	54	7	150
78521-R	VRTP.100+I A-10	99	37	20	18	16	20.5	25.5	10	17	60	M6	37	54	7	145
78522-R	VRTP.100+I A-12	99	37	20	18	16	20.5	25.5	12	17	60	M6	37	54	7	140
78620-R	VRTP.125+I A-8	125	44	22	22	20	26	31	8	22	65	M8	48	94	10	250
78621-R	VRTP.125+I A-12	125	44	22	22	20	26	31	12	22	65	M8	48	94	10	245
78622-R	VRTP.125+I A-14	125	44	22	22	20	26	31	14	22	65	M8	48	94	10	240
78720-R	VRTP.160+I A-8	160	51	25	26	24	31	40	8	27	73	M8	65	185	15	363
78721-R	VRTP.160+I A-14	160	51	25	26	24	31	40	14	27	73	M8	65	185	15	356
78722-R	VRTP.160+I A-16	160	51	25	26	24	31	40	16	27	73	M8	65	185	15	339
78820-R	VRTP.200+I A-8	200	61	28	30	28	36	48.5	8	34	80	M8	84	300	24	579
78821-R	VRTP.200+I A-16	200	61	28	30	28	36	48.5	16	34	80	M8	84	300	24	552
78823-R	VRTP.200+I A-20	200	61	28	30	28	36	48.5	20	34	80	M8	84	300	24	525
78921-R	VRTP.250+I A-20	250	69	32	35	33	44	58	20	38	90	M10	105	420	28	904
78923-R	VRTP.250+I A-24	250	69	32	35	33	44	58	24	38	90	M10	105	420	28	888
78958-R	VRTP.300+I A-20	300	78	35.5	40	37	52	66	20	43	90	M10	127	480	36	1050
78961-R	VRTP.300+I A-26	300	78	35.5	40	37	52	66	26	43	90	M10	123	480	36	1111
79021-R	VRTP.375+I A-26	375	87	39	35	33	70	81	26	43	90	M10	160	380	55	1240
78926-R	VRTP.250+IEL A-20	250	69	32	35	33	44	58	20	38	65	M10	105	420	28	914
78928-R	VRTP.250+IEL A-24	250	69	32	35	33	44	58	24	38	65	M10	105	420	28	818
78964-R	VRTP.300+IEL A-20	300	78	35.5	40	37	52	66	20	43	65	M10	127	480	36	1060
78966-R	VRTP.300+IEL A-26	300	78	35.5	40	37	52	66	26	43	65	M10	127	480	36	1121
79026-R	VRTP.375+IEL A-26	375	87	39	35	33	70	81	26	43	65	M10	160	380	55	1260

See Technical Data on catalogue 038, page A8, for maximum applicable torque (C) and impact strength (L).

ELESA and GANTER models all rights reserved in accordance with the law. Always mention the source when reproducing our drawings.