HFTX.

ELESA Original design

Oil level indicators

PA-T +110° -30°

- **Threaded body with magnifying lens**
  Transparent polyamide based (PA-T) technopolymer. Resistant to solvents, oils with additives, greases, acids and alkali. Avoid contact with alcohol or detergents containing alcohol.
- **Star-shaped contrast screen**
  Matte anodised aluminium with red central level point.
- **Flat packing ring**
  NBR synthetic rubber.
- **Maximum continuous working temperature**
  110°C.

Accessories on request
Brass nut type GH. (see page 1006) for fitting to reservoirs with wall thickness smaller than 5 mm.

Features
The particular shape of the magnifying lens increases and improves visibility even from side positions.

Technical data
An adequate tightening torque (see table below) is recommended when screwing the oil level indicator, so as to guarantee optimal tightness without any deformation of the packing ring. Suggested tightening torque is the result of laboratory tests at ambient temperature (23°C) with indicator, packing ring and reservoir walls perfectly cleaned.

Note
For use with fluids containing special additives, please contact ELESA Sales Department.

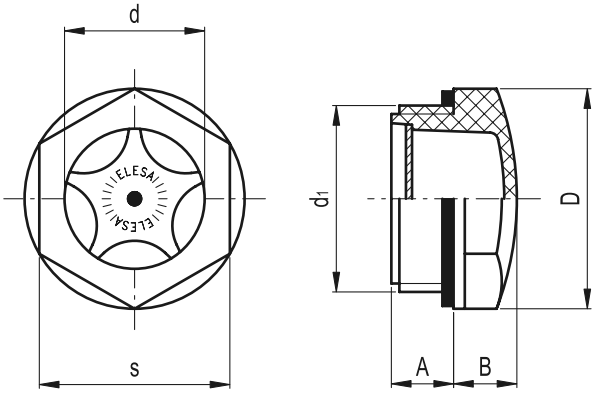

Elesa Standards		Main dimensions						Tightening torque	⚖
Code	Description	d_1	A	B	D	d	s	[Nm]	g
13661	HFTX.11-M16x1.5	M16x1.5	8	7	22	11	19	2÷3	4
13681	HFTX.14-M20x1.5	M20x1.5	9.5	8	26	14	22	8÷10	5
13701	HFTX.18-M25x1.5	M25x1.5	8	9	31.5	18	27	8÷10	8
13711	HFTX.19-M27x1.5	M27x1.5	9	9	31.5	20	27	8÷10	8
13726	HFTX.21-M26x1.5	M26x1.5	13	9	31.5	18	27	8÷10	8
13731	HFTX.22-M30x1.5	M30x1.5	9	10	35	22	30	8÷10	10
13751	HFTX.26-M35x1.5	M35x1.5	11	10	40	25	34	8÷10	13
13771	HFTX.31-M40x1.5	M40x1.5	11.5	13	47.5	30	40.5	8÷10	20
13651	HFTX.9-1/4	G 1/4	10	6	18	9	15	2÷3	3
13671	HFTX.12-3/8	G 3/8	7.5	7	22	11	19	3÷5	4
13691	HFTX.15-1/2	G 1/2	10.5	8	26	14	22	4÷6	5
13721	HFTX.20-3/4	G 3/4	10.5	9	31.5	20	27	6÷8	8
13741	HFTX.24-1	G 1	11	10	40	25	34	8÷10	12
13761	HFTX.30-1¼	G 1¼	11.5	13	47.5	30	40.5	8÷10	20

ELESA and GANTER models all rights reserved in accordance with the law. Always mention the source when reproducing our drawings.