MR.p

ELESA Original design

Adjustable handles

PA +130° -30°

- **Lever body**
  Glass-fibre reinforced polyamide based (PA) technopolymer. Resistant to solvents, oils, greases and other chemical agents.
- **Colour**
  Black, orange, grey, matte finish.
  For sufficient quantities RAL 6011 green.
- **Clamping element**
  Glass-fibre reinforced technopolymer, black colour, with knurling on the protruding part to make initial tightening easier. Black-oxide steel retaining screw and AISI 302 stainless steel return spring.
- **Assembly**
  Black-oxide steel threaded stud, chamfered flat end according to UNI 947 : ISO 4753 (see Technical Data on page A11).

Features and applications

Particularly suitable when the lever turning angle is limited owing to lack of space.
MR.p adjustable handles can be quickly screwed during assembly by means of electric or pneumatic screwdrivers with controlled tightening torque system.

Stress resistance

Adjustable handles are generally used for repetitive clamping operations sometimes with very high-frequency.
Therefore, the stress resistance (i.e. the resistance to repeated tightening cycles) of the handle unit is particularly important and, especially, the strength of the toothed element which transmits the tightening force from the handle to the threaded element (boss or stud).
In fact, the results of several laboratory tests, perfomed with a special instrument that simulates the most severe use conditions, have shown that e.g. MR.80 p adjustable handle can withstand without yielding more than 100,000 tightening cycles, under the action of a force of 490 N (see graphic).
The special glass-fibre reinforced technopolymer enables the ELESA adjustable handles to guarantee stress resistance values which are much higher than the ones generated under normal working conditions.

Instructions of use

For clamping, lift the lever to disengage the clamping device toothing and bring it back to start position. By releasing the lever, the return spring automatically engages the toothing.
If the lever cannot make a 360° rotation, the clamping element can be easily screwed by means of the hexagon socket front head screw (after having disengaged the lever).

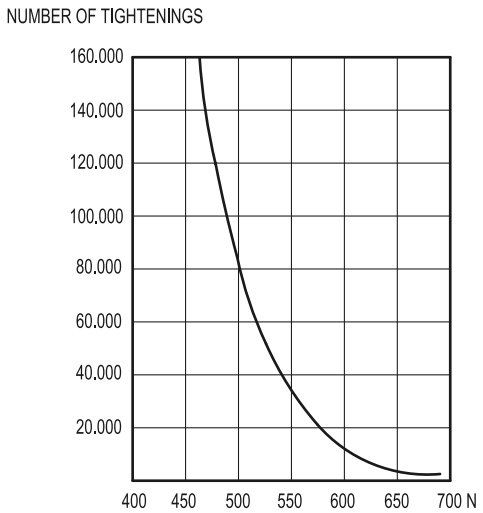

ELESA and GANTER models all rights reserved in accordance with the law. Always mention the source when reproducing our drawings.

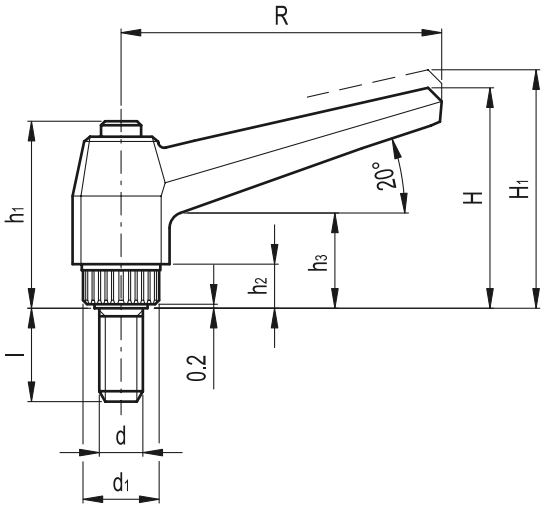

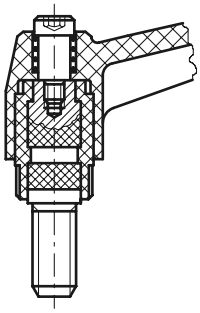

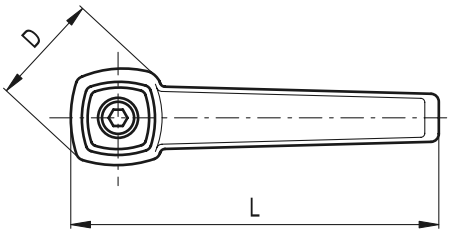

RAL 9005 RAL 2004 RAL 7031

Standard Elements				Main dimensions									Threaded stud		Teeth no.	⚖
Black	Orange	Grey	Description													
Code				R	L	D	H	H1	h1	h2	h3	d1	d 6g	l	z	g
41201	41202	41204	MR.40 p-M5x10*	42	50	18	32	36.5	29	6	14	12	M5	10	18	15
41211	41212	41214	MR.40 p-M5x16*	42	50	18	32	36.5	29	6	14	12	M5	16	18	16
41221	41222	41224	MR.40 p-M5x20*	42	50	18	32	36.5	29	6	14	12	M5	20	18	17
41301	41302	41304	MR.40 p-M6x10*	42	50	18	32	36.5	29	6	14	12	M6	10	18	16
41311	41312	41314	MR.40 p-M6x16*	42	50	18	32	36.5	29	6	14	12	M6	16	18	17
41321	41322	41324	MR.40 p-M6x20*	42	50	18	32	36.5	29	6	14	12	M6	20	18	18
41331	41332	41334	MR.40 p-M6x25*	42	50	18	32	36.5	29	6	14	12	M6	25	18	19
41335	41336	41338	MR.40 p-M6x30*	42	50	18	32	36.5	29	6	14	12	M6	30	18	20
41341	41342	41344	MR.40 p-M6x40*	42	50	18	32	36.5	29	6	14	12	M6	40	18	21
41357	41358	41360	MR.40 p-M8x20*	42	50	18	32	36.5	29	6	14	12	M8	20	18	20
41431	41432	41434	MR.63 p-M6x10*	63	73	23	43	47	36	8	17	15	M6	10	20	31
41441	41442	41444	MR.63 p-M6x16*	63	73	23	43	47	36	8	17	15	M6	16	20	32
41451	41452	41454	MR.63 p-M6x20*	63	73	23	43	47	36	8	17	15	M6	20	20	33
41461	41462	41464	MR.63 p-M6x25*	63	73	23	43	47	36	8	17	15	M6	25	20	34
41466	41467	41469	MR.63 p-M6x30*	63	73	23	43	47	36	8	17	15	M6	30	20	35
41470	-	-	MR.63 p-M6x35*	63	73	23	43	47	36	8	17	15	M6	35	20	35
41471	41472	41474	MR.63 p-M6x40*	63	73	23	43	47	36	8	17	15	M6	40	20	36
41501	41502	41504	MR.63 p-M8x16*	63	73	23	43	47	36	8	17	15	M8	16	20	34
41511	41512	41514	MR.63 p-M8x20*	63	73	23	43	47	36	8	17	15	M8	20	20	35
41521	41522	41524	MR.63 p-M8x25*	63	73	23	43	47	36	8	17	15	M8	25	20	37
41531	41532	41534	MR.63 p-M8x30*	63	73	23	43	47	36	8	17	15	M8	30	20	39
41526	41527	41528	MR.63 p-M8x32*	63	73	23	43	47	36	8	17	15	M8	32	20	40
41535	41536	41538	MR.63 p-M8x35*	63	73	23	43	47	36	8	17	15	M8	35	20	41
41541	41542	41544	MR.63 p-M8x40*	63	73	23	43	47	36	8	17	15	M8	40	20	43
41551	41552	41554	MR.63 p-M8x45*	63	73	23	43	47	36	8	17	15	M8	45	20	45
41561	41562	41564	MR.63 p-M8x50*	63	73	23	43	47	36	8	17	15	M8	50	20	47
41569	41570	41572	MR.63 p-M8x60*	63	73	23	43	47	36	8	17	15	M8	60	20	51
41597	41598	41600	MR.63 p-M10x40*	63	73	23	43	47	36	8	17	15	M10	40	20	52

* Complete the description of the standard item needed by adding one of the colours listed in the code column.

ELESA and GANTER models all rights reserved in accordance with the law. Always mention the source when reproducing our drawings.

RAL 9005 RAL 2004 RAL 7031

Standard Elements				Main dimensions									Threaded stud		Teeth no.	⚖
Black	Orange	Grey	Description													
Code				R	L	D	H	H_1	h_1	h_2	h_3	d_1	d_{6g}	l	z	g
42182	42183	42185	MR.80 p-M8x70*	80	92	28	54	59.5	45	10	22	19	M8	70	24	85
42196	42197	42198	MR.80 p-M10x16*	80	92	28	54	59.5	45	10	22	19	M10	16	24	70
42201	42202	42204	MR.80 p-M10x20*	80	92	28	54	59.5	45	10	22	19	M10	20	24	72
42211	42212	42214	MR.80 p-M10x25*	80	92	28	54	59.5	45	10	22	19	M10	25	24	74
42221	42222	42224	MR.80 p-M10x30*	80	92	28	54	59.5	45	10	22	19	M10	30	24	77
42216	42217	42218	MR.80 p-M10x32*	80	92	28	54	59.5	45	10	22	19	M10	32	24	78
42225	42226	42228	MR.80 p-M10x35*	80	92	28	54	59.5	45	10	22	19	M10	35	24	80
42231	42232	42234	MR.80 p-M10x40*	80	92	28	54	59.5	45	10	22	19	M10	40	24	82
42241	42242	42244	MR.80 p-M10x50*	80	92	28	54	59.5	45	10	22	19	M10	50	24	87
42245	42246	42248	MR.80 p-M10x60*	80	92	28	54	59.5	45	10	22	19	M10	60	24	92
42251	42252	42254	MR.80 p-M10x70*	80	92	28	54	59.5	45	10	22	19	M10	70	24	97
42301	42302	42304	MR.80 p-M12x20*	80	92	28	54	59.5	45	10	22	19	M12	20	24	76
42311	42312	42314	MR.80 p-M12x25*	80	92	28	54	59.5	45	10	22	19	M12	25	24	80
42321	42322	42324	MR.80 p-M12x30*	80	92	28	54	59.5	45	10	22	19	M12	30	24	84
42325	42326	42328	MR.80 p-M12x35*	80	92	28	54	59.5	45	10	22	19	M12	35	24	88
42331	42332	42334	MR.80 p-M12x40*	80	92	28	54	59.5	45	10	22	19	M12	40	24	92
42335	42336	42338	MR.80 p-M12x45*	80	92	28	54	59.5	45	10	22	19	M12	45	24	92
42341	42342	42344	MR.80 p-M12x50*	80	92	28	54	59.5	45	10	22	19	M12	50	24	100
42351	42352	42354	MR.80 p-M12x60*	80	92	28	54	59.5	45	10	22	19	M12	60	24	108
42361	42362	42364	MR.80 p-M12x70*	80	92	28	54	59.5	45	10	22	19	M12	70	24	116
42365	42366	42368	MR.80 p-M12x80*	80	92	28	54	59.5	45	10	22	19	M12	80	24	118
42381	42382	42384	MR.80 p-M14x40*	80	92	28	54	59.5	45	10	22	19	M14	40	24	153
42601	42602	42604	MR.100 p-M12x30*	100	114	33	65	70.5	53	12	25	25	M12	30	28	138
42651	42652	42654	MR.100 p-M12x50*	100	114	33	65	70.5	53	12	25	25	M12	50	28	150
42701	42702	42704	MR.100 p-M12x70*	100	114	33	65	70.5	53	12	25	25	M12	70	28	162
42801	42802	42804	MR.100 p-M14x30*	100	114	33	65	70.5	53	12	25	25	M14	30	28	142
42805	42806	42808	MR.100 p-M14x35*	100	114	33	65	70.5	53	12	25	25	M14	35	28	147
42831	42832	42834	MR.100 p-M14x50*	100	114	33	65	70.5	53	12	25	25	M14	50	28	162
42851	42852	42854	MR.100 p-M14x70*	100	114	33	65	70.5	53	12	25	25	M14	70	28	182
42901	42902	42904	MR.100 p-M16x30*	100	114	33	65	70.5	53	12	25	25	M16	30	28	149
42951	42952	42954	MR.100 p-M16x50*	100	114	33	65	70.5	53	12	25	25	M16	50	28	177
42981	42982	42984	MR.100 p-M16x70*	100	114	33	65	70.5	53	12	25	25	M16	70	28	205

* Complete the description of the standard item needed by adding one of the colours listed in the code column.

elesa+GANTER

ELESA and GANTER models all rights reserved in accordance with the law. Always mention the source when reproducing our drawings.