GN 101

Adjustable handles

- **Lever body**
  Zinc pressure die-cast.
- **Colour**
  RAL 9005 black (type SW) and RAL 2004 orange (type OR), epoxy resin coating.
- **Assembly**
  Black oxide steel threaded stud and screw.

Features and applications
The full range of adjustable handles are used for applications where a limited space or a particular handle position is required.
Instructions of use
The threaded stud is connected to the handle via serrations and can be easily disengaged.
By pulling the handle, the internal mechanism disengages the serrations and allows the handle to swivel to the ideal clamping position.
By releasing the handle, the mechanism automatically re-engages serrations.
Ergonomy and design
The shape of GN 101 adjustable handles is the result of modern industrial design.

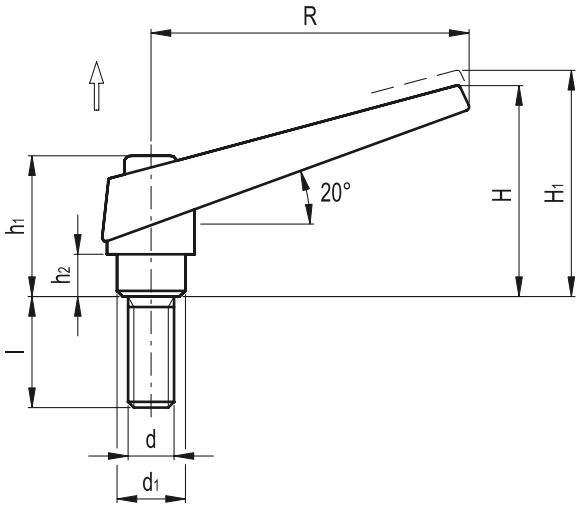

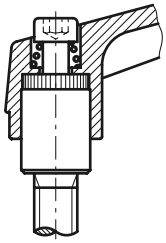

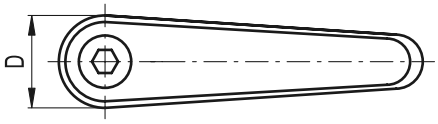

SW *RAL 9005* **OR** *RAL 2004*

Standard Elements	Main dimensions							Threaded stud		⚖
Description	R	D	H	H_1	h_1	h_2	d_1	d	l	g
GN 101-14-M5-12-*	45	14	35	38.5	25	4.5	10	M5	12	37
GN 101-14-M5-16-*	45	14	35	38.5	25	4.5	10	M5	16	37
GN 101-14-M5-20-*	45	14	35	38.5	25	4.5	10	M5	20	39
GN 101-14-M5-25-*	45	14	35	38.5	25	4.5	10	M5	25	37
GN 101-14-M5-32-*	45	14	35	38.5	25	4.5	10	M5	32	38
GN 101-14-M5-40-*	45	14	35	38.5	25	4.5	10	M5	40	39
GN 101-14-M5-50-*	45	14	35	38.5	25	4.5	10	M5	50	40
GN 101-14-M6-12-*	45	14	35	38.5	25	4.5	10	M6	12	37
GN 101-14-M6-16-*	45	14	35	38.5	25	4.5	10	M6	16	39
GN 101-14-M6-20-*	45	14	35	38.5	25	4.5	10	M6	20	38
GN 101-14-M6-25-*	45	14	35	38.5	25	4.5	10	M6	25	39
GN 101-14-M6-32-*	45	14	35	38.5	25	4.5	10	M6	32	41
GN 101-14-M6-40-*	45	14	35	38.5	25	4.5	10	M6	40	41
GN 101-14-M6-50-*	45	14	35	38.5	25	4.5	10	M6	50	43

* Complete the description of the standard item needed by adding the index of the colour of the lever body: SW (black) or OR (orange).

elesa+GANTER® ELESA and GANTER models all rights reserved in accordance with the law. Always mention the source when reproducing our drawings.

GN 101

Standard Elements	Main dimensions							Threaded stud		⚖
Description	R	D	H	H_1	h_1	h_2	d_1	d	l	g
GN 101-18-M6-16-*	62	18	45	49	31	6.5	13.5	M6	16	76
GN 101-18-M6-20-*	62	18	45	49	31	6.5	13.5	M6	20	76
GN 101-18-M6-25-*	62	18	45	49	31	6.5	13.5	M6	25	77
GN 101-18-M6-32-*	62	18	45	49	31	6.5	13.5	M6	32	78
GN 101-18-M6-40-*	62	18	45	49	31	6.5	13.5	M6	40	82
GN 101-18-M6-50-*	62	18	45	49	31	6.5	13.5	M6	50	83
GN 101-18-M6-63-*	62	18	45	49	31	6.5	13.5	M6	63	84
GN 101-18-M8-16-*	62	18	45	49	31	6.5	13.5	M8	16	78
GN 101-18-M8-20-*	62	18	45	49	31	6.5	13.5	M8	20	79
GN 101-18-M8-25-*	62	18	45	49	31	6.5	13.5	M8	25	81
GN 101-18-M8-32-*	62	18	45	49	31	6.5	13.5	M8	32	88
GN 101-18-M8-40-*	62	18	45	49	31	6.5	13.5	M8	40	88
GN 101-18-M8-50-*	62	18	45	49	31	6.5	13.5	M8	50	90
GN 101-18-M8-63-*	62	18	45	49	31	6.5	13.5	M8	63	93
GN 101-22-M10-20-*	74	22	52	56	36	8	16	M10	20	132
GN 101-22-M10-25-*	74	22	52	56	36	8	16	M10	25	136
GN 101-22-M10-32-*	74	22	52	56	36	8	16	M10	32	137
GN 101-22-M10-40-*	74	22	52	56	36	8	16	M10	40	143
GN 101-22-M10-50-*	74	22	52	56	36	8	16	M10	50	148
GN 101-22-M10-63-*	74	22	52	56	36	8	16	M10	63	152
GN 101-22-M10-80-*	74	22	52	56	36	8	16	M10	80	160
GN 101-25-M12-25-*	89	25	63	67	43	11	19	M12	25	203
GN 101-25-M12-32-*	89	25	63	67	43	11	19	M12	32	206
GN 101-25-M12-40-*	89	25	63	67	43	11	19	M12	40	216
GN 101-25-M12-50-*	89	25	63	67	43	11	19	M12	50	220
GN 101-25-M12-63-*	89	25	63	67	43	11	19	M12	63	229
GN 101-25-M12-80-*	89	25	63	67	43	11	19	M12	80	240
GN 101-30-M16-32-*	108	30	76	81	50.5	12	23	M16	32	362
GN 101-30-M16-40-*	108	30	76	81	50.5	12	23	M16	40	373
GN 101-30-M16-50-*	108	30	76	81	50.5	12	23	M16	50	386
GN 101-30-M16-63-*	108	30	76	81	50.5	12	23	M16	63	403
GN 101-30-M16-80-*	108	30	76	81	50.5	12	23	M16	80	424

* Complete the description of the standard item needed by adding the index of the colour of the lever body: SW (black) or OR (orange).

ELESA and GANTER models all rights reserved in accordance with the law. Always mention the source when reproducing our drawings.