ERZ.p

ELESA Original design

ERGOSTYLE®

Adjustable handles

PA +130° -30°

- **Lever body**
  Glass-fibre reinforced polyamide based (PA) technopolymer. Resistant to solvents, oils, greases and other chemical agents. Built-in zinc alloy toothed insert for coupling to the metal clamping element.
- **Colour**
  Grey-black, matte finish.
- **Clamping element**
  Black-oxide steel with toothed element for coupling to the built-in zinc alloy insert, black-oxide steel retaining screw and return spring.

Special executions on request *(For sufficient quantities)*
Lever body in orange colour.

Features and applications
Particularly suitable when the lever turning angle is limited owing to lack of space.
The metal toothing of the built-in zinc alloy insert allows the assembly of clamping elements completely made out of metal, which can be easily modified by machining in case of special assembly requirements.

Instructions of use
For clamping, lift the lever to disengage the clamping device toothing and bring it back to start position. By releasing the lever, the return spring automatically engages the toothing.
If the lever cannot make a 360° rotation, the clamping element can be easily screwed by means of the hexagon socket front head screw (after having disengaged the lever).

Ergonomy and design
The slightly arched shape of the lever and the ergonomic terminal enlargement give the operator a comfortable and safe grip and make the design of the handle more elegant.
The design of the lever body of this series is exactly like the design of ERX.p adjustable levers, which has been awarded by the following jurys for Industrial Design: Die Gute Industrieform Hannover 1995, Internationaler Designpreis des Landes Baden-Württemberg 1996/97.

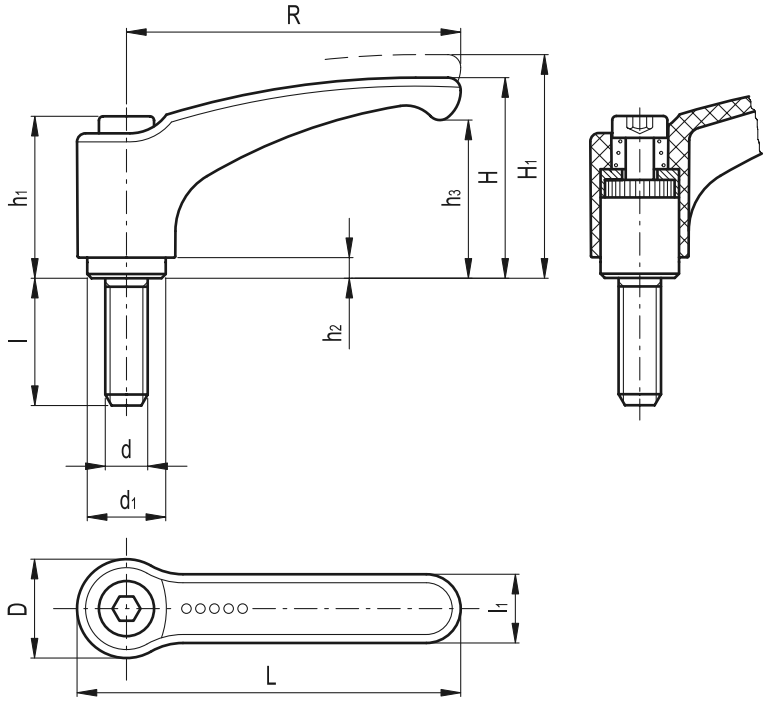

Standard Elements		Main dimensions										Thread		Teeth no.	⚖
Code	Description	R	L	D	H	H_1	h_1	h_2	h_3	d_1	l_1	d	l	z	g
238103	ERZ.44 p-M4x12	44	52	15.5	30.5	34	24.5	3.5	22.5	10	11	M4	12	18	15
238105	ERZ.44 p-M4x16	44	52	15.5	30.5	34	24.5	3.5	22.5	10	11	M4	16	18	16
238107	ERZ.44 p-M4x20	44	52	15.5	30.5	34	24.5	3.5	22.5	10	11	M4	20	18	17
238109	ERZ.44 p-M4x25	44	52	15.5	30.5	34	24.5	3.5	22.5	10	11	M4	25	18	18
238111	ERZ.44 p-M4x32	44	52	15.5	30.5	34	24.5	3.5	22.5	10	11	M4	32	18	19
238133	ERZ.44 p-M5x12	44	52	15.5	30.5	34	24.5	3.5	22.5	10	11	M5	12	18	17
238135	ERZ.44 p-M5x16	44	52	15.5	30.5	34	24.5	3.5	22.5	10	11	M5	16	18	18
238137	ERZ.44 p-M5x20	44	52	15.5	30.5	34	24.5	3.5	22.5	10	11	M5	20	18	19
238139	ERZ.44 p-M5x25	44	52	15.5	30.5	34	24.5	3.5	22.5	10	11	M5	25	18	20
238141	ERZ.44 p-M5x32	44	52	15.5	30.5	34	24.5	3.5	22.5	10	11	M5	32	18	21
238143	ERZ.44 p-M5x40	44	52	15.5	30.5	34	24.5	3.5	22.5	10	11	M5	40	18	22
238145	ERZ.44 p-M5x50	44	52	15.5	30.5	34	24.5	3.5	22.5	10	11	M5	50	18	23
238153	ERZ.44 p-M6x12	44	52	15.5	30.5	34	24.5	3.5	22.5	10	11	M6	12	18	19
238155	ERZ.44 p-M6x16	44	52	15.5	30.5	34	24.5	3.5	22.5	10	11	M6	16	18	20
238157	ERZ.44 p-M6x20	44	52	15.5	30.5	34	24.5	3.5	22.5	10	11	M6	20	18	21
238159	ERZ.44 p-M6x25	44	52	15.5	30.5	34	24.5	3.5	22.5	10	11	M6	25	18	22
238161	ERZ.44 p-M6x32	44	52	15.5	30.5	34	24.5	3.5	22.5	10	11	M6	32	18	23
238163	ERZ.44 p-M6x40	44	52	15.5	30.5	34	24.5	3.5	22.5	10	11	M6	40	18	24
238165	ERZ.44 p-M6x50	44	52	15.5	30.5	34	24.5	3.5	22.5	10	11	M6	50	18	25

elesa+GANTER® ELESA and GANTER models all rights reserved in accordance with the law. Always mention the source when reproducing our drawings.

Standard Elements		Main dimensions										Thread		Teeth no.	⚖
Code	Description	R	L	D	H	H_1	h_1	h_2	h_3	d_1	l_1	d	l	z	g
238333	ERZ.63 p-M6x12	63	73.5	19	38.5	42	31	3.5	30	13.5	13.5	M6	12	24	47
238335	ERZ.63 p-M6x16	63	73.5	19	38.5	42	31	3.5	30	13.5	13.5	M6	16	24	49
238337	ERZ.63 p-M6x20	63	73.5	19	38.5	42	31	3.5	30	13.5	13.5	M6	20	24	55
238339	ERZ.63 p-M6x25	63	73.5	19	38.5	42	31	3.5	30	13.5	13.5	M6	25	24	57
238341	ERZ.63 p-M6x32	63	73.5	19	38.5	42	31	3.5	30	13.5	13.5	M6	32	24	61
238343	ERZ.63 p-M6x40	63	73.5	19	38.5	42	31	3.5	30	13.5	13.5	M6	40	24	68
238345	ERZ.63 p-M6x50	63	73.5	19	38.5	42	31	3.5	30	13.5	13.5	M6	50	24	77
238347	ERZ.63 p-M6x63	63	73.5	19	38.5	42	31	3.5	30	13.5	13.5	M6	63	24	79
238351	ERZ.63 p-M8x12	63	73.5	19	38.5	42	31	3.5	30	13.5	13.5	M8	12	24	40
238353	ERZ.63 p-M8x16	63	73.5	19	38.5	42	31	3.5	30	13.5	13.5	M8	16	24	41
238355	ERZ.63 p-M8x20	63	73.5	19	38.5	42	31	3.5	30	13.5	13.5	M8	20	24	42
238357	ERZ.63 p-M8x25	63	73.5	19	38.5	42	31	3.5	30	13.5	13.5	M8	25	24	43
238359	ERZ.63 p-M8x32	63	73.5	19	38.5	42	31	3.5	30	13.5	13.5	M8	32	24	44
238361	ERZ.63 p-M8x40	63	73.5	19	38.5	42	31	3.5	30	13.5	13.5	M8	40	24	46
238363	ERZ.63 p-M8x50	63	73.5	19	38.5	42	31	3.5	30	13.5	13.5	M8	50	24	48
238365	ERZ.63 p-M8x63	63	73.5	19	38.5	42	31	3.5	30	13.5	13.5	M8	63	24	51
238373	ERZ.63 p-M10x20	63	73.5	19	38.5	42	31	3.5	30	13.5	13.5	M10	20	24	42
238375	ERZ.63 p-M10x25	63	73.5	19	38.5	42	31	3.5	30	13.5	13.5	M10	25	24	43
238377	ERZ.63 p-M10x32	63	73.5	19	38.5	42	31	3.5	30	13.5	13.5	M10	32	24	45
238379	ERZ.63 p-M10x40	63	73.5	19	38.5	42	31	3.5	30	13.5	13.5	M10	40	24	47
238381	ERZ.63 p-M10x50	63	73.5	19	38.5	42	31	3.5	30	13.5	13.5	M10	50	24	52
238383	ERZ.63 p-M10x63	63	73.5	19	38.5	42	31	3.5	30	13.5	13.5	M10	63	24	53
238385	ERZ.63 p-M10x80	63	73.5	19	38.5	42	31	3.5	30	13.5	13.5	M10	80	24	57
238533	ERZ.78 p-M8x16	78	90.5	23	46.5	50.5	36	3.5	36.5	16	16	M8	16	26	70
238535	ERZ.78 p-M8x20	78	90.5	23	46.5	50.5	36	3.5	36.5	16	16	M8	20	26	73
238537	ERZ.78 p-M8x25	78	90.5	23	46.5	50.5	36	3.5	36.5	16	16	M8	25	26	76
238539	ERZ.78 p-M8x32	78	90.5	23	46.5	50.5	36	3.5	36.5	16	16	M8	32	26	81
238541	ERZ.78 p-M8x40	78	90.5	23	46.5	50.5	36	3.5	36.5	16	16	M8	40	26	86
238543	ERZ.78 p-M8x50	78	90.5	23	46.5	50.5	36	3.5	36.5	16	16	M8	50	26	88
238545	ERZ.78 p-M8x63	78	90.5	23	46.5	50.5	36	3.5	36.5	16	16	M8	63	26	94
238547	ERZ.78 p-M8x80	78	90.5	23	46.5	50.5	36	3.5	36.5	16	16	M8	80	26	102
238551	ERZ.78 p-M10x16	78	90.5	23	46.5	50.5	36	3.5	36.5	16	16	M10	16	26	82
238553	ERZ.78 p-M10x20	78	90.5	23	46.5	50.5	36	3.5	36.5	16	16	M10	20	26	85
238555	ERZ.78 p-M10x25	78	90.5	23	46.5	50.5	36	3.5	36.5	16	16	M10	25	26	91
238557	ERZ.78 p-M10x32	78	90.5	23	46.5	50.5	36	3.5	36.5	16	16	M10	32	26	98
238559	ERZ.78 p-M10x40	78	90.5	23	46.5	50.5	36	3.5	36.5	16	16	M10	40	26	108
238561	ERZ.78 p-M10x50	78	90.5	23	46.5	50.5	36	3.5	36.5	16	16	M10	50	26	120
238563	ERZ.78 p-M10x63	78	90.5	23	46.5	50.5	36	3.5	36.5	16	16	M10	63	26	124
238565	ERZ.78 p-M10x80	78	90.5	23	46.5	50.5	36	3.5	36.5	16	16	M10	80	26	127
238573	ERZ.78 p-M12x25	78	90.5	23	46.5	50.5	36	3.5	36.5	16	16	M12	25	26	70
238575	ERZ.78 p-M12x32	78	90.5	23	46.5	50.5	36	3.5	36.5	16	16	M12	32	26	73
238577	ERZ.78 p-M12x40	78	90.5	23	46.5	50.5	36	3.5	36.5	16	16	M12	40	26	75
238579	ERZ.78 p-M12x50	78	90.5	23	46.5	50.5	36	3.5	36.5	16	16	M12	50	26	79
238581	ERZ.78 p-M12x63	78	90.5	23	46.5	50.5	36	3.5	36.5	16	16	M12	63	26	85
238583	ERZ.78 p-M12x80	78	90.5	23	46.5	50.5	36	3.5	36.5	16	16	M12	80	26	88
238723	ERZ.95 p-M10x16	95	109	26.5	56.5	61.5	43	5	45	19	18	M10	16	28	111
238725	ERZ.95 p-M10x20	95	109	26.5	56.5	61.5	43	5	45	19	18	M10	20	28	113
238727	ERZ.95 p-M10x25	95	109	26.5	56.5	61.5	43	5	45	19	18	M10	25	28	115
238729	ERZ.95 p-M10x32	95	109	26.5	56.5	61.5	43	5	45	19	18	M10	32	28	118
238731	ERZ.95 p-M10x40	95	109	26.5	56.5	61.5	43	5	45	19	18	M10	40	28	121
238733	ERZ.95 p-M10x50	95	109	26.5	56.5	61.5	43	5	45	19	18	M10	50	28	128
238735	ERZ.95 p-M10x63	95	109	26.5	56.5	61.5	43	5	45	19	18	M10	63	28	133
238737	ERZ.95 p-M10x80	95	109	26.5	56.5	61.5	43	5	45	19	18	M10	80	28	141
238747	ERZ.95 p-M12x16	95	109	26.5	56.5	61.5	43	5	45	19	18	M12	16	28	113
238749	ERZ.95 p-M12x20	95	109	26.5	56.5	61.5	43	5	45	19	18	M12	20	28	117
238751	ERZ.95 p-M12x25	95	109	26.5	56.5	61.5	43	5	45	19	18	M12	25	28	122
238753	ERZ.95 p-M12x32	95	109	26.5	56.5	61.5	43	5	45	19	18	M12	32	28	125
238755	ERZ.95 p-M12x40	95	109	26.5	56.5	61.5	43	5	45	19	18	M12	40	28	132
238757	ERZ.95 p-M12x50	95	109	26.5	56.5	61.5	43	5	45	19	18	M12	50	28	141
238759	ERZ.95 p-M12x63	95	109	26.5	56.5	61.5	43	5	45	19	18	M12	63	28	151
238761	ERZ.95 p-M12x80	95	109	26.5	56.5	61.5	43	5	45	19	18	M12	80	28	160
238773	ERZ.95 p-M16x25	95	109	26.5	56.5	61.5	43	5	45	19	18	M16	25	28	139
238775	ERZ.95 p-M16x32	95	109	26.5	56.5	61.5	43	5	45	19	18	M16	32	28	146
238777	ERZ.95 p-M16x40	95	109	26.5	56.5	61.5	43	5	45	19	18	M16	40	28	154
238779	ERZ.95 p-M16x50	95	109	26.5	56.5	61.5	43	5	45	19	18	M16	50	28	171
238781	ERZ.95 p-M16x63	95	109	26.5	56.5	61.5	43	5	45	19	18	M16	63	28	184
238783	ERZ.95 p-M16x80	95	109	26.5	56.5	61.5	43	5	45	19	18	M16	80	28	199

ELESA and GANTER models all rights reserved in accordance with the law. Always mention the source when reproducing our drawings.