ERM.SST-p

ERGOSTYLE® INOX Stainless Steel

ELESA Original design

Adjustable handles

- **Lever body**
  Zinc alloy die-cast, epoxy resin coating.
- **Colour**
  RAL 2004 orange, RAL 3000 red, RAL 9006 grey, RAL 9005 black matte finish.
- **Clamping element**
  AISI 303 stainless steel with toothed element for coupling to the lever body, stainless steel retaining screw and return spring.

Special executions on request *(For sufficient quantities)*
- Lever body in different colours.
- Chrome-plated lever.
- Clamping element with different threadings and lengths.

Features and applications
Particularly suitable when the lever turning angle is limited owing to lack of space.
AISI 303 stainless steel, thanks to its high resistance to corrosion, allows the application of these adjustable handles on machines and equipment in those sectors where laws or particular hygienic, climatic and environmental factors make it mandatory to use corrosion resistant materials.

Instructions of use
For clamping, lift the lever to disengage the clamping device toothing and bring it back to start position. By releasing the lever, the return spring automatically engages the toothing.
If the lever cannot make a 360° rotation, the clamping element can be easily screwed by means of the hexagon socket front head screw (after having disengaged the lever).

Ergonomy and design
The slightly arched shape of the lever and the ergonomic terminal enlargement give the operator a comfortable and safe grip and make the design of the handle more elegant.
The design of the lever body of this series is exactly like the design of ERX.SST-p adjustable levers, which has been awarded by the following jurys for Industrial Design: Die Gute Industrieform Hannover 1995, Internationaler Designpreis des Landes Baden-Württemberg 1996/97.

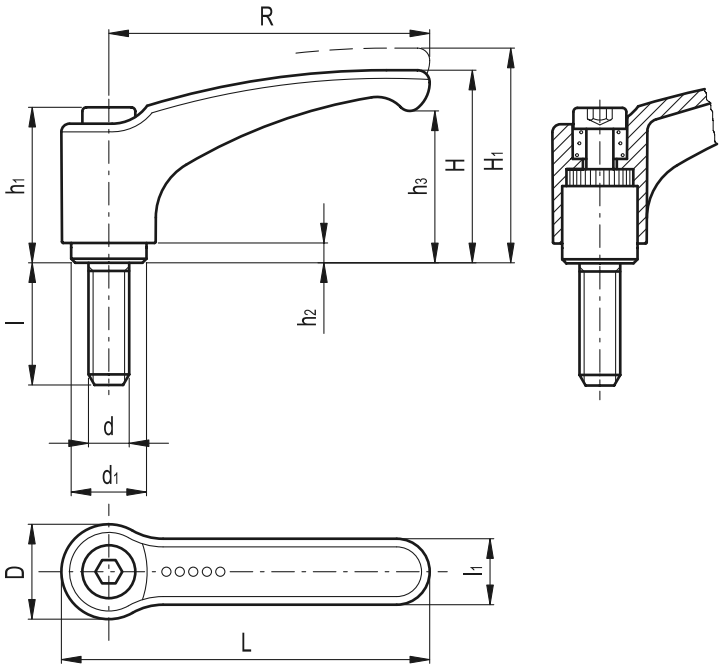

elesa+GANTER
ELESA and GANTER models all rights reserved in accordance with the law. Always mention the source when reproducing our drawings.

Standard Elements		Main dimensions										Thread		Teeth no.	⚖
Code	Description	R	L	D	H	H_1	h_1	h_2	h_3	d_1	l_1	d	l	z	g
241133-*	ERM.44 SST-p-M5x12-*	44	52	14.5	30	33	24.5	3.5	20.5	10	11	M5	12	18	17
241135-*	ERM.44 SST-p-M5x16-*	44	52	14.5	30	33	24.5	3.5	20.5	10	11	M5	16	18	18
241137-*	ERM.44 SST-p-M5x20-*	44	52	14.5	30	33	24.5	3.5	20.5	10	11	M5	20	18	19
241139-*	ERM.44 SST-p-M5x25-*	44	52	14.5	30	33	24.5	3.5	20.5	10	11	M5	25	18	20
241141-*	ERM.44 SST-p-M5x32-*	44	52	14.5	30	33	24.5	3.5	20.5	10	11	M5	32	18	21
241143-*	ERM.44 SST-p-M5x40-*	44	52	14.5	30	33	24.5	3.5	20.5	10	11	M5	40	18	22
241145-*	ERM.44 SST-p-M5x50-*	44	52	14.5	30	33	24.5	3.5	20.5	10	11	M5	50	18	23
241153-*	ERM.44 SST-p-M6x12-*	44	52	14.5	30	33	24.5	3.5	20.5	10	11	M6	12	18	19
241155-*	ERM.44 SST-p-M6x16-*	44	52	14.5	30	33	24.5	3.5	20.5	10	11	M6	16	18	20
241157-*	ERM.44 SST-p-M6x20-*	44	52	14.5	30	33	24.5	3.5	20.5	10	11	M6	20	18	21
241159-*	ERM.44 SST-p-M6x25-*	44	52	14.5	30	33	24.5	3.5	20.5	10	11	M6	25	18	22
241161-*	ERM.44 SST-p-M6x32-*	44	52	14.5	30	33	24.5	3.5	20.5	10	11	M6	32	18	23
241163-*	ERM.44 SST-p-M6x40-*	44	52	14.5	30	33	24.5	3.5	20.5	10	11	M6	40	18	24
241165-*	ERM.44 SST-p-M6x50-*	44	52	14.5	30	33	24.5	3.5	20.5	10	11	M6	50	18	25
241235-*	ERM.63 SST-p-M6x16-*	63	73.5	18	38	41	31	3.5	27	13.5	13.5	M6	16	24	49
241237-*	ERM.63 SST-p-M6x20-*	63	73.5	18	38	41	31	3.5	27	13.5	13.5	M6	20	24	55
241239-*	ERM.63 SST-p-M6x25-*	63	73.5	18	38	41	31	3.5	27	13.5	13.5	M6	25	24	57
241241-*	ERM.63 SST-p-M6x32-*	63	73.5	18	38	41	31	3.5	27	13.5	13.5	M6	32	24	61
241243-*	ERM.63 SST-p-M6x40-*	63	73.5	18	38	41	31	3.5	27	13.5	13.5	M6	40	24	68
241245-*	ERM.63 SST-p-M6x50-*	63	73.5	18	38	41	31	3.5	27	13.5	13.5	M6	50	24	77
241247-*	ERM.63 SST-p-M6x63-*	63	73.5	18	38	41	31	3.5	27	13.5	13.5	M6	63	24	79
241253-*	ERM.63 SST-p-M8x16-*	63	73.5	18	38	41	31	3.5	27	13.5	13.5	M8	16	24	59
241255-*	ERM.63 SST-p-M8x20-*	63	73.5	18	38	41	31	3.5	27	13.5	13.5	M8	20	24	66
241257-*	ERM.63 SST-p-M8x25-*	63	73.5	18	38	41	31	3.5	27	13.5	13.5	M8	25	24	69
241259-*	ERM.63 SST-p-M8x32-*	63	73.5	18	38	41	31	3.5	27	13.5	13.5	M8	32	24	73
241261-*	ERM.63 SST-p-M8x40-*	63	73.5	18	38	41	31	3.5	27	13.5	13.5	M8	40	24	82
241263-*	ERM.63 SST-p-M8x50-*	63	73.5	18	38	41	31	3.5	27	13.5	13.5	M8	50	24	92
241265-*	ERM.63 SST-p-M8x63-*	63	73.5	18	38	41	31	3.5	27	13.5	13.5	M8	63	24	95
241335-*	ERM.78 SST-p-M8x20-*	78	90.5	21.5	46	50	36	3.5	34.5	16	16	M8	20	26	69
241337-*	ERM.78 SST-p-M8x25-*	78	90.5	21.5	46	50	36	3.5	34.5	16	16	M8	25	26	75
241339-*	ERM.78 SST-p-M8x32-*	78	90.5	21.5	46	50	36	3.5	34.5	16	16	M8	32	26	80
241341-*	ERM.78 SST-p-M8x40-*	78	90.5	21.5	46	50	36	3.5	34.5	16	16	M8	40	26	88
241343-*	ERM.78 SST-p-M8x50-*	78	90.5	21.5	46	50	36	3.5	34.5	16	16	M8	50	26	98
241345-*	ERM.78 SST-p-M8x63-*	78	90.5	21.5	46	50	36	3.5	34.5	16	16	M8	63	26	101
241347-*	ERM.78 SST-p-M8x80-*	78	90.5	21.5	46	50	36	3.5	34.5	16	16	M8	80	26	104
241353-*	ERM.78 SST-p-M10x20-*	78	90.5	21.5	46	50	36	3.5	34.5	16	16	M10	20	26	85
241355-*	ERM.78 SST-p-M10x25-*	78	90.5	21.5	46	50	36	3.5	34.5	16	16	M10	25	26	91
241357-*	ERM.78 SST-p-M10x32-*	78	90.5	21.5	46	50	36	3.5	34.5	16	16	M10	32	26	98
241359-*	ERM.78 SST-p-M10x40-*	78	90.5	21.5	46	50	36	3.5	34.5	16	16	M10	40	26	108
241361-*	ERM.78 SST-p-M10x50-*	78	90.5	21.5	46	50	36	3.5	34.5	16	16	M10	50	26	120
241363-*	ERM.78 SST-p-M10x63-*	78	90.5	21.5	46	50	36	3.5	34.5	16	16	M10	63	26	124
241365-*	ERM.78 SST-p-M10x80-*	78	90.5	21.5	46	50	36	3.5	34.5	16	16	M10	80	26	127
241425-*	ERM.95 SST-p-M10x20-*	95	109	25	56	61	43	5	42	19	18	M10	20	28	113
241427-*	ERM.95 SST-p-M10x25-*	95	109	25	56	61	43	5	42	19	18	M10	25	28	115
241429-*	ERM.95 SST-p-M10x32-*	95	109	25	56	61	43	5	42	19	18	M10	32	28	118
241431-*	ERM.95 SST-p-M10x40-*	95	109	25	56	61	43	5	42	19	18	M10	40	28	121
241433-*	ERM.95 SST-p-M10x50-*	95	109	25	56	61	43	5	42	19	18	M10	50	28	128
241435-*	ERM.95 SST-p-M10x63-*	95	109	25	56	61	43	5	42	19	18	M10	63	28	133
241437-*	ERM.95 SST-p-M10x80-*	95	109	25	56	61	43	5	42	19	18	M10	80	28	141
241449-*	ERM.95 SST-p-M12x20-*	95	109	25	56	61	43	5	42	19	18	M12	20	28	117
241451-*	ERM.95 SST-p-M12x25-*	95	109	25	56	61	43	5	42	19	18	M12	25	28	122
241453-*	ERM.95 SST-p-M12x32-*	95	109	25	56	61	43	5	42	19	18	M12	32	28	125
241455-*	ERM.95 SST-p-M12x40-*	95	109	25	56	61	43	5	42	19	18	M12	40	28	132
241457-*	ERM.95 SST-p-M12x50-*	95	109	25	56	61	43	5	42	19	18	M12	50	28	141
241459-*	ERM.95 SST-p-M12x63-*	95	109	25	56	61	43	5	42	19	18	M12	63	28	151
241461-*	ERM.95 SST-p-M12x80-*	95	109	25	56	61	43	5	42	19	18	M12	80	28	160

* Complete the code and the description of the standard item needed by adding the index of the colour of the lever body (C2,C6,C8,C9) ex: 241137-C2 ERM.44 SST-p-M5x20-C2

ELESA and GANTER models all rights reserved in accordance with the law. Always mention the source when reproducing our drawings.