VH.153 p

ELESA Original design

Lobe knobs

PF +110° -20°

- **Material**
  Phenolic based (PF) Duroplast. Resistant to solvents, oils, greases and other chemical agents.
- **Colour**
  Black, glossy finish.
- **Assembly**
  Zinc-plated steel threaded stud, chamfered flat end according to UNI 947 : ISO 4753 (see Technical Data on page A11).

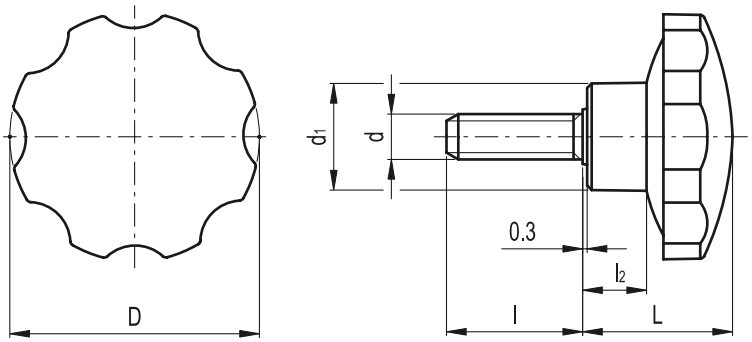

Standard Elements		Main dimensions				Threaded stud		⚖
Code	Description	D	L	d_1	l_2	d 6g	l	g
73041	VH.153/25 p-M6x20	25	18	15	9	M6	20	14
73151	VH.153/35 p-M6x16	35	22	19	10	M6	16	22
73161	VH.153/35 p-M8x16	35	22	19	10	M8	16	26
73162	VH.153/35 p-M8x25	35	22	19	10	M8	25	29
73163	VH.153/35 p-M8x35	35	22	19	10	M8	35	32
73251	VH.153/44 p-M8x20	44	26	19	10	M8	20	40
73252	VH.153/44 p-M8x25	44	26	19	10	M8	25	42
73253	VH.153/44 p-M8x30	44	26	19	10	M8	30	44
73254	VH.153/44 p-M8x40	44	26	19	10	M8	40	47
73255	VH.153/44 p-M8x50	44	26	19	10	M8	50	50
73261	VH.153/44 p-M10x25	44	26	19	10	M10	25	52
73262	VH.153/44 p-M10x30	44	26	19	10	M10	30	53
73263	VH.153/44 p-M10x50	44	26	19	10	M10	50	60
73351	VH.153/54 p-M10x30	54	32	24	13	M10	30	76
73441	VH.153/62 p-M10x40	62	35	24	13	M10	40	95
73451	VH.153/62 p-M12x30	62	35	24	13	M12	30	105
73531	VH.153/74 p-M12x50	72	46	32	21	M12	50	180

elesa+GANTER ELESA and GANTER models all rights reserved in accordance with the law. Always mention the source when reproducing our drawings.