DIN 469

Crank handles

- **Material**
  - Malleable cast iron (size 63).
  - Nodular deburred cast iron, sandblasted matte finish (size 80 to 315).
- **Assembly**
  - Execution **B**: hub with H7 reamed through hole.
  - Execution **V**: hub with H11 square through hole in compliance with details for square DIN 79 (see page A16).
- **Handle**
  - Type **D**: turned and mirror-polished steel revolving handle DIN 98 (see page 400).
  - Type **F**: turned and mirror-polished steel fixed handle DIN 39 (see page 400).

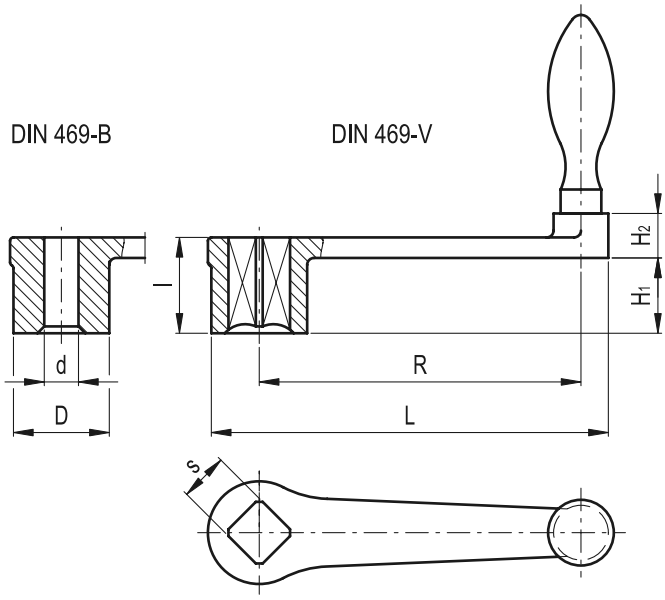

Standard Elements	Main dimensions					Mounting hole			Handle	⚖	
										Handle D	Handle F
Description	R	L	D	H_1	H_2	d H7	s H11	l	Ø	g	g
DIN 469-63-B6-*	63	80	20	15	11	6	-	20	16	138	128
DIN 469-63-V10-*	63	80	20	15	11	-	10x10	20	16	120	110
DIN 469-80-B8-*	80	102	24	18	13	8	-	24	18	215	203
DIN 469-80-V10-*	80	102	24	18	13	-	10x10	24	18	191	179
DIN 469-80-V12-*	80	102	24	18	13	-	12x12	24	18	182	170
DIN 469-100-B10-*	100	124	28	21	13	10	-	28	20	302	288
DIN 469-100-V12-*	100	124	28	21	13	-	12x12	28	20	285	271
DIN 469-100-V14-*	100	124	28	21	13	-	14x14	28	20	278	264
DIN 469-125-B10-*	125	154	34	26	14	10	-	34	22	472	458
DIN 469-125-V14-*	125	154	34	26	14	-	14x14	34	22	448	434
DIN 469-125-V17-*	125	154	34	26	14	-	17x17	34	22	428	414
DIN 469-160-B14-*	160	192	38	29	14	14	-	38	25	687	677
DIN 469-160-V17-*	160	192	38	29	14	-	17x17	38	25	652	642
DIN 469-160-V19-*	160	192	38	29	14	-	19x19	38	25	614	604
DIN 469-200-B17-*	200	238	44	34	21	17	-	44	28	1044	1021
DIN 469-200-V19-*	200	238	44	34	21	-	19x19	44	28	1021	998
DIN 469-200-V22-*	200	238	44	34	21	-	22x22	44	28	998	970
DIN 469-250-B17-*	250	290	48	36	21	17	-	48	32	1420	1412
DIN 469-250-V22-*	250	290	48	36	21	-	22x22	48	32	1340	1332
DIN 469-250-V24-*	250	290	48	36	21	-	24x24	48	32	1289	1281

* Complete the description of the standard item needed by adding the type of handle D or F.

ELESA and GANTER models all rights reserved in accordance with the law. Always mention the source when reproducing our drawings.