GN 321-A

Solid handwheels

- **Material**
  Cast aluminium, fine sandblasted matte surface, turned and mirror-polished rim.
- **Assembly**
  - Execution **B**: H7 reamed hole.
  - Execution **K**: H7 reamed hole and keyway in compliance with DIN 6885/1 P9 tolerance (see page A17).

  For fixing GN 321-A on shafts by a grub screw see Technical Data on page A18.

Other standard executions available
GN 321.4-A (see page 96) or GN 321.5-A (see page 98) with GN 000.4 (see page 103) or GN 000.5 (see page 104) safety coupling bushing.

Accessories on request
Axial retaining washer type GN 184 (see page 631).

Technical Data
Axial and radial runout lower than IT 12.

design'80 stuttgart

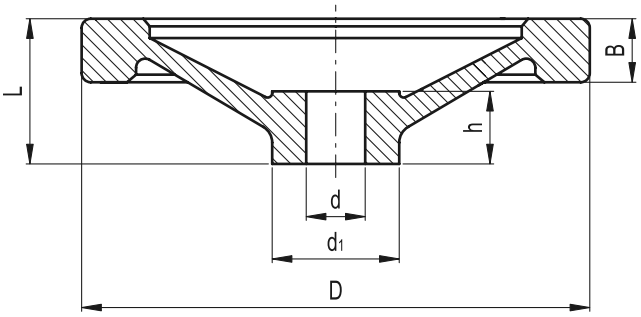

Standard Elements	Main dimensions				Bore		⚖
Description	D	L	B	d1	d H7	h	g
GN 321-80-B10-A	80	26	13	26	10	16	134
GN 321-80-B12-A	80	26	13	26	12	16	127
GN 321-80-K10-A	80	26	13	26	10	16	132
GN 321-80-K12-A	80	26	13	26	12	16	125
GN 321-100-B10-A	100	30	14	28	10	17	215
GN 321-100-B12-A	100	30	14	28	12	17	213
GN 321-100-K10-A	100	30	14	28	10	17	213
GN 321-100-K12-A	100	30	14	28	12	17	211
GN 321-125-B12-A	125	33	15	31	12	18	318
GN 321-125-B14-A	125	33	15	31	14	18	298
GN 321-125-K12-A	125	33	15	31	12	18	316
GN 321-125-K14-A	125	33	15	31	14	18	290
GN 321-140-B14-A	140	36	16.5	36	14	19	431
GN 321-140-B16-A	140	36	16.5	36	16	19	427
GN 321-140-K14-A	140	36	16.5	36	14	19	425
GN 321-140-K16-A	140	36	16.5	36	16	19	429
GN 321-160-B14-A	160	39	18	36	14	20	570
GN 321-160-B16-A	160	39	18	36	16	20	560
GN 321-160-K14-A	160	39	18	36	14	20	566
GN 321-160-K16-A	160	39	18	36	16	20	556
GN 321-200-B18-A	200	45	20.5	45	18	24	885
GN 321-200-B20-A	200	45	20.5	45	20	24	884
GN 321-200-K18-A	200	45	20.5	45	18	24	880
GN 321-200-K20-A	200	45	20.5	45	20	24	860
GN 321-250-B22-A	250	51	23	48	22	28	1522
GN 321-250-B26-A	250	51	23	48	26	28	1479
GN 321-250-K22-A	250	51	23	48	22	28	1517
GN 321-250-K26-A	250	51	23	48	26	28	1474

elesa+GANTER ELESA and GANTER models all rights reserved in accordance with the law. Always mention the source when reproducing our drawings.